Model E and E3 Alarm Check Valve

2-1/2" (65mm), 3" (80mm), 4" (100mm), 6" (150mm), 8" (200mm)

cULus Listed, FM Approved

Features

- Designed expressly for wet pipe fire sprinkler systems
- Approved for vertical or horizontal application
- Clapper bypass aids in prevention of false alarms
- Available with loose trim, segmented trim, or fully assembled
- Model E3 (grooved ends) rated to 300 psi (20.7 bar)

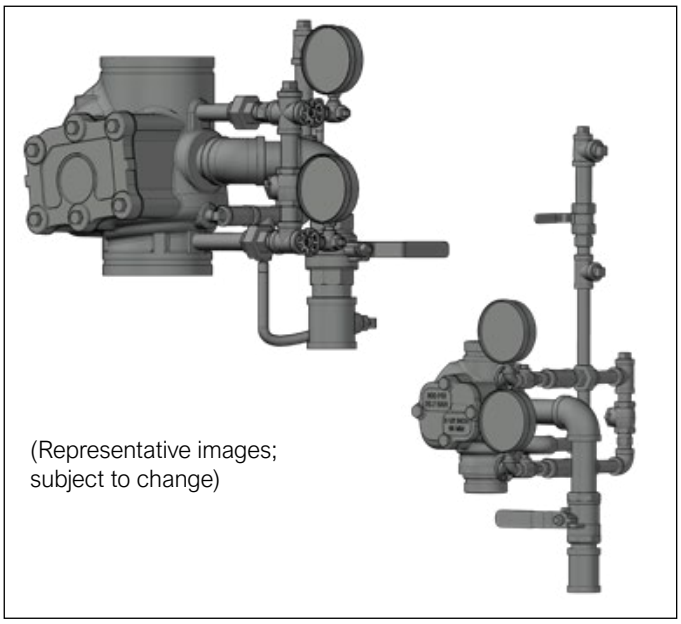

Product Description

Reliable Model E and E3 Alarm Check Valves act as a water flow alarm initiating device in wet pipe sprinkler systems. When water flows in the sprinkler system due to the operation of one or more automatic fire sprinklers, the alarm valve opens allowing continuous flow of water into the system. The alarm valve clapper incorporates a normally unpressurized intermediate chamber connected to an alarm line. When the clapper lifts due to water movement in the system, the intermediate chamber and alarm line pressurize, activating water flow devices such as mechanical (water motor) bells and/or pressure switches. The alarm line may also be used to operate foam concentrate hydraulic ball valves on foam systems.

The design of the Model E and E3 Alarm Check Valve allows for installation under both variable and constant supply pressure conditions. The valve trim incorporates a bypass between the water supply and the wet pipe system. When pressure surges in the waters supply occur, the trim allows a small amount of water to bypass the clapper limiting the potential of false alarms.

Table A below provides general information on the Model E & E3 Alarm Valve. Detailed information is found on subsequent pages of this bulletin.

Alarm Check Valve General Specifications — **Table A**

Size in. (mm)	Model	End Connections	Rated Pressure psi (bar)	Listings & Approvals	Weight lbs (kg)
2-1/2 (65)	E	Flange x Flange	175 (12.1)	cULus FM UKCA	52 (23.6)
		Flange x Groove	175 (12.1)		49 (22.2)
	E3	Groove x Groove	300 (20.7)		44 (20)
3 (80)	E	Flange x Flange	175 (12.1)		52 (23.6)
		Flange x Groove	175 (12.1)		49 (22.2)
	E3	Groove x Groove	300 (20.7)		44 (20)
4 (100)	E	Flange x Flange	175 (12.1)	cULus FM UKCA LPCB	104 (47.2)
		Flange x Groove	175 (12.1)		94 (42.6)
	E3	Groove x Groove	300 (20.7)		84 (38.1)
6 (150)	E	Flange x Flange	175 (12.1)		140 (63.5)
		Flange x Groove	175 (12.1)		126 (57.2)
	E3	Groove x Groove	300 (20.7)		112 (50.8)
8 (200)	E	Flange x Flange	175 (12.1)		185 (83.9)
		Flange x Groove	175 (12.1)		173 (78.5)
	E3	Groove x Groove	300 (20.7)		161 (73)

Notes:
1. Grooved ends per ANSI/AWWA C606; flanged ends per ASME B16.5 Class 150, BS-E, or PN16 (specify).
2. Valves are intended to be installed on systems where the pressure does not exceed the working capabilities of the end configurations.
3. Approximate shipping weight given for fully assembled valve and trim.

2-1/2” and 3” Model E & E3 Alarm Check Valve

Technical Specifications
Pressure Rating: See Table A

Material Specifications
See Figures 7 & 8

End Connections
See Table A

Installation Orientation
Vertical (Up Through Valve)
Horizontal (Clapper Hinge on Top)

Approvals
cULus Listed
FM Approved
UKCA

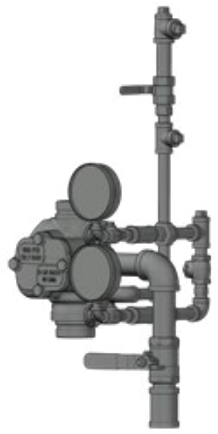

Model E and E3 Alarm Check Valve Dimensions — **Figure 1**

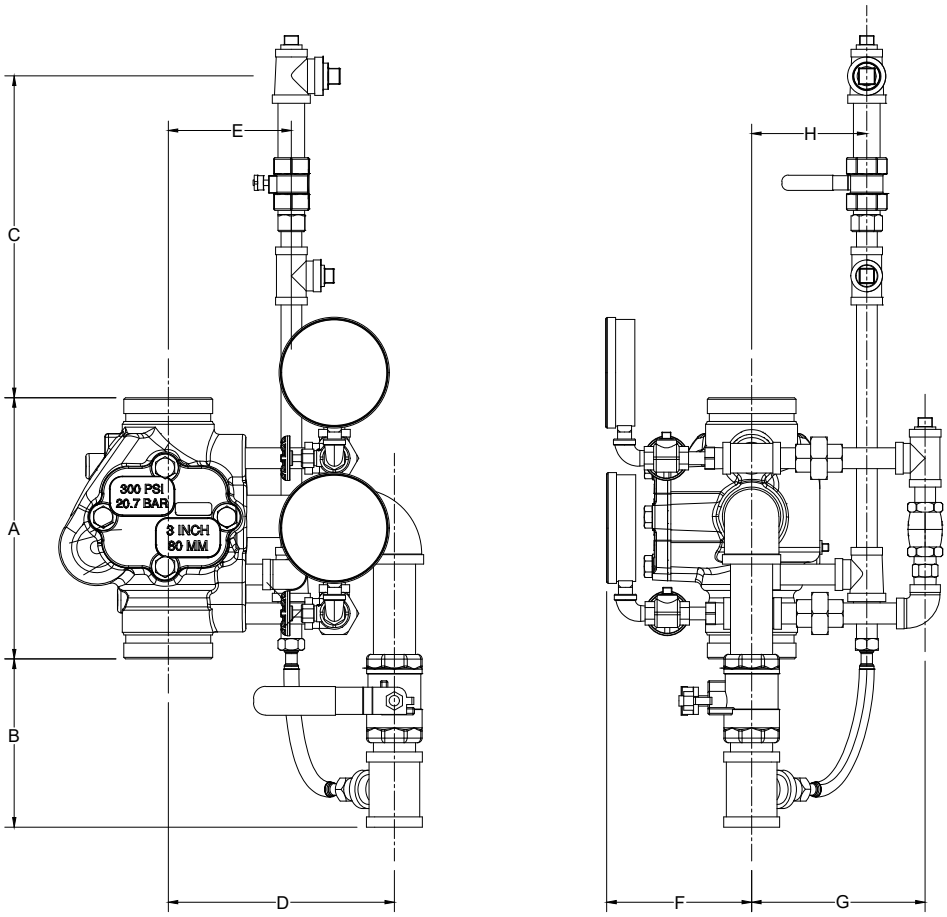

FRONT VIEW

SIDE VIEW

Dimensions - in. (mm) — **Table B**

Valve Size	A	B	C	D	E	F	G	H
2-1/2” (65mm)	10-1/4 (260)	6-5/8 (168)	12-5/8 (321)	8-7/8 (225)	4-7/8 (124)	5-3/4 (146)	6-7/8 (175)	4-1/2 (114)
3” (80mm)	10-1/4 (260)	6-5/8 (168)	12-5/8 (321)	8-7/8 (225)	4-7/8 (124)	5-3/4 (146)	6-7/8 (175)	4-1/2 (114)

Note: Dimension A (body take-out) is same for all end configurations.

2-1/2” and 3” Model E and E3 Alarm Check Valve Section

Figure 2

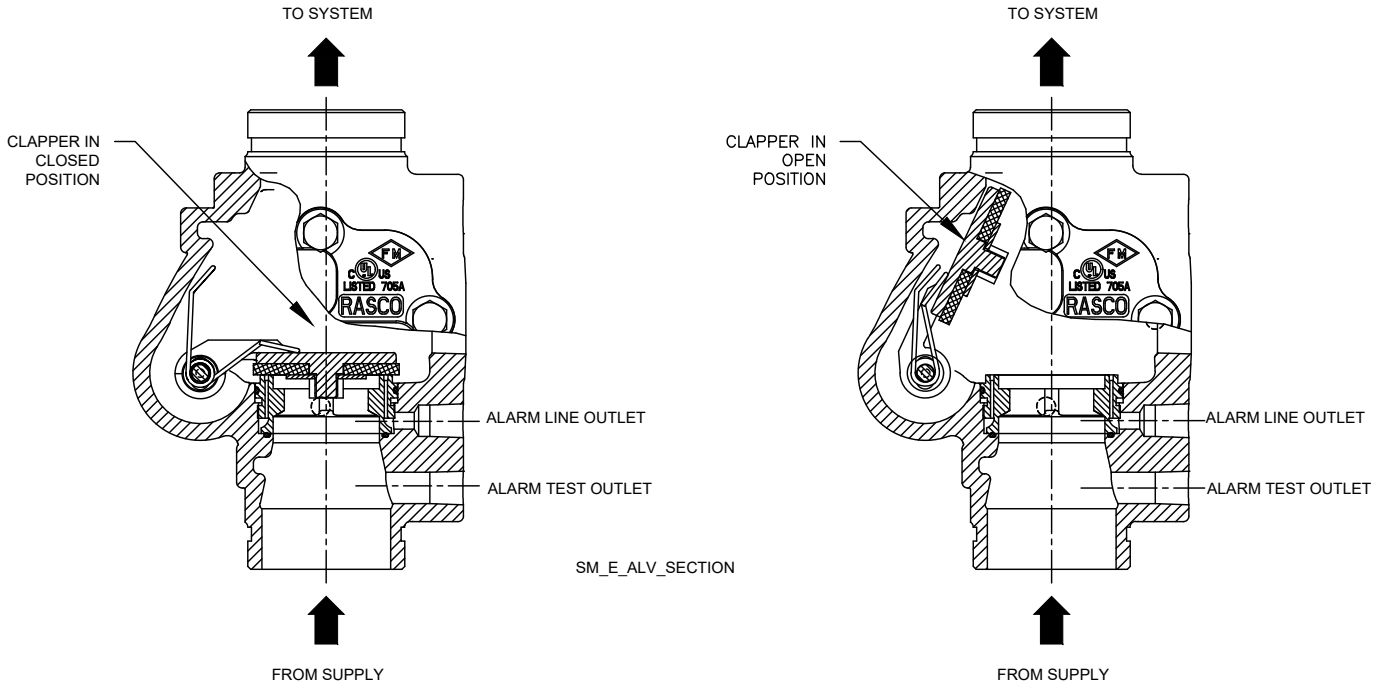

2-1/2” and 3” Model E and E3 Alarm Check Valve Components

Figure 3

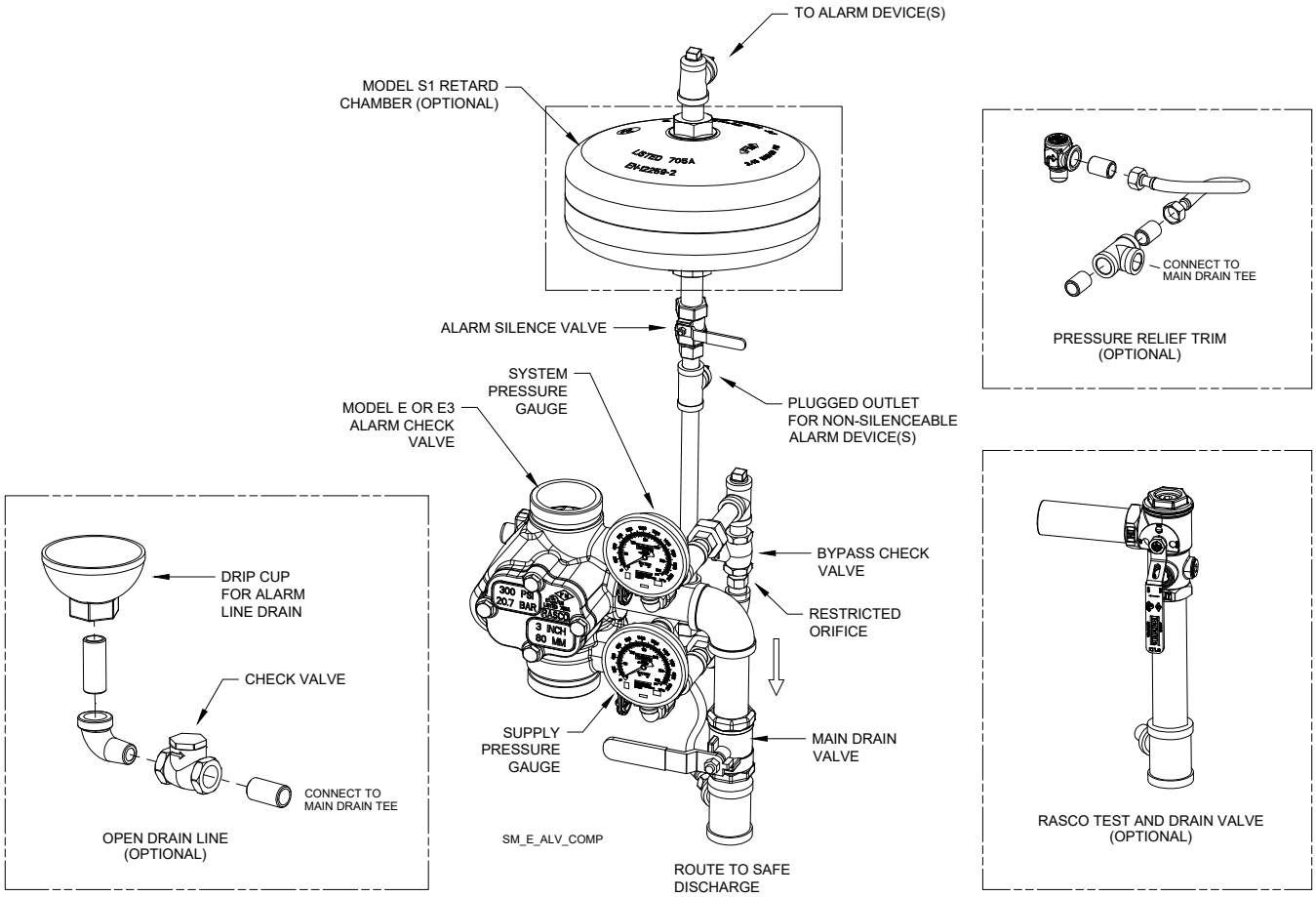

4”, 6”, and 8” Model E & E3 Alarm Check Valve

Technical Specifications
Pressure Rating: See Table A

Material Specifications
See Figures 7 & 8

End Connections
See Table A

Installation Orientation
Vertical (Up Through Valve)
Horizontal (Clapper Hinge on Top)

Approvals
cULus Listed
FM Approved
UKCA
LPCB

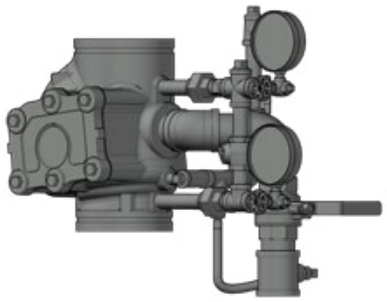

Model E and E3 Alarm Check Valve Dimensions

Figure 4

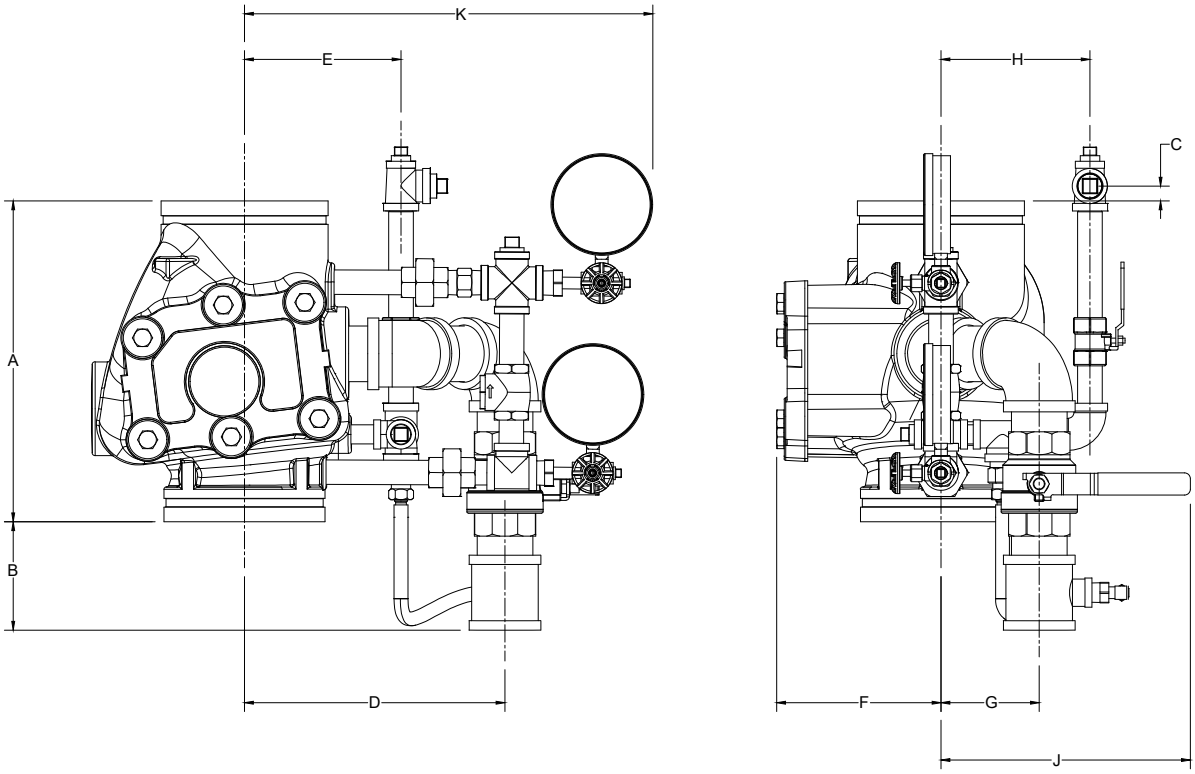

FRONT VIEW

SIDE VIEW

Dimensions - in. (mm)

Table C

Valve Size	A	B	C	D	E	F	G	H	J	K
4” (100mm)	11-3/4 (298)	5-1/8 (130)	2-1/4 (57)	10-1/4 (260)	6-1/8 (156)	5-5/8 (143)	3-3/4 (95)	6-3/8 (162)	6-1/2 (165)	16-1/4 (413)
6” (150mm)	13-3/4 (349)	4-5/8 (117)	5/8 (16)	11-1/8 (283)	6-5/8 (168)	7 (178)	4-1/4 (108)	6-3/8 (162)	6-1/2 (165)	17-3/8 (441)
8” (200mm)	14-1/2 (368)	4 (102)	1/4 (6)	12 (305)	7-7/8 (200)	7-3/4 (197)	4-1/4 (108)	6-3/8 (162)	6-1/2 (165)	18-3/4 (476)

Note: Dimension A (body take-out) is same for all end configurations.

4”, 6”, and 8” Model E and E3 Alarm Check Valve Section

Figure 5

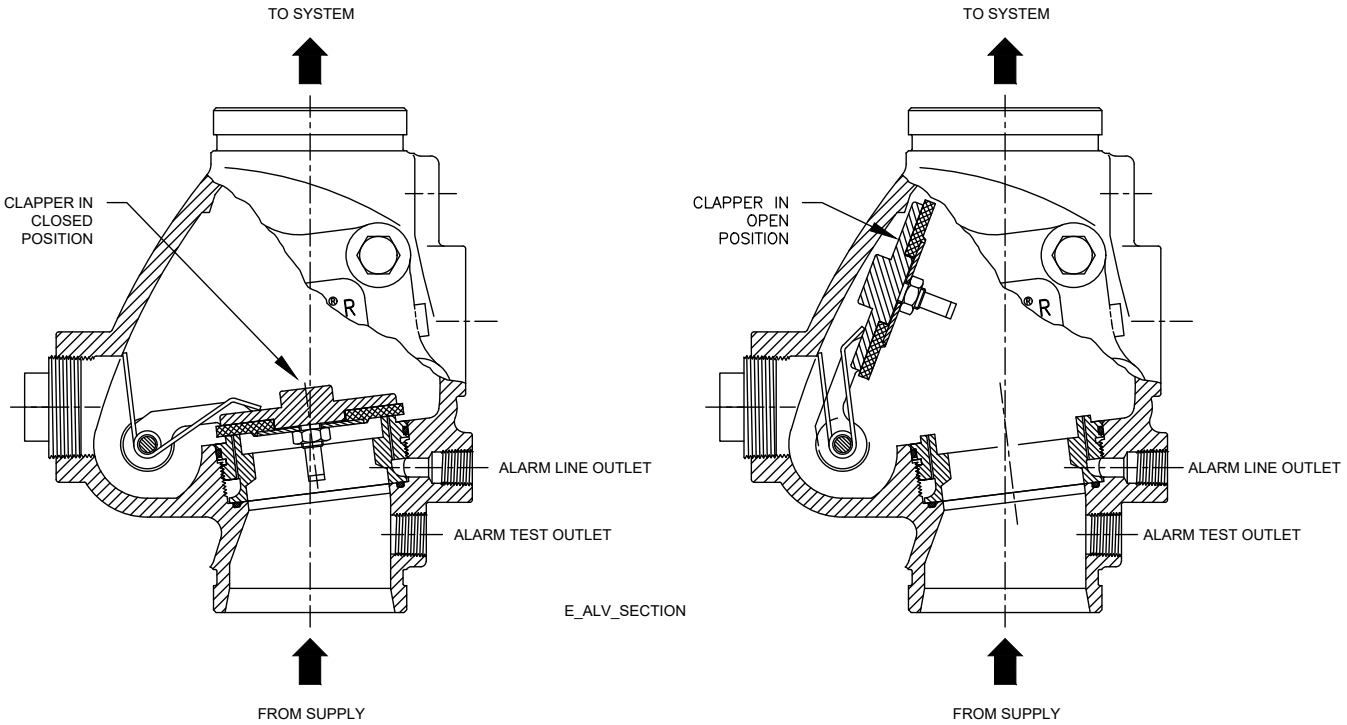

Model E and E3 Alarm Check Valve Components

Figure 6

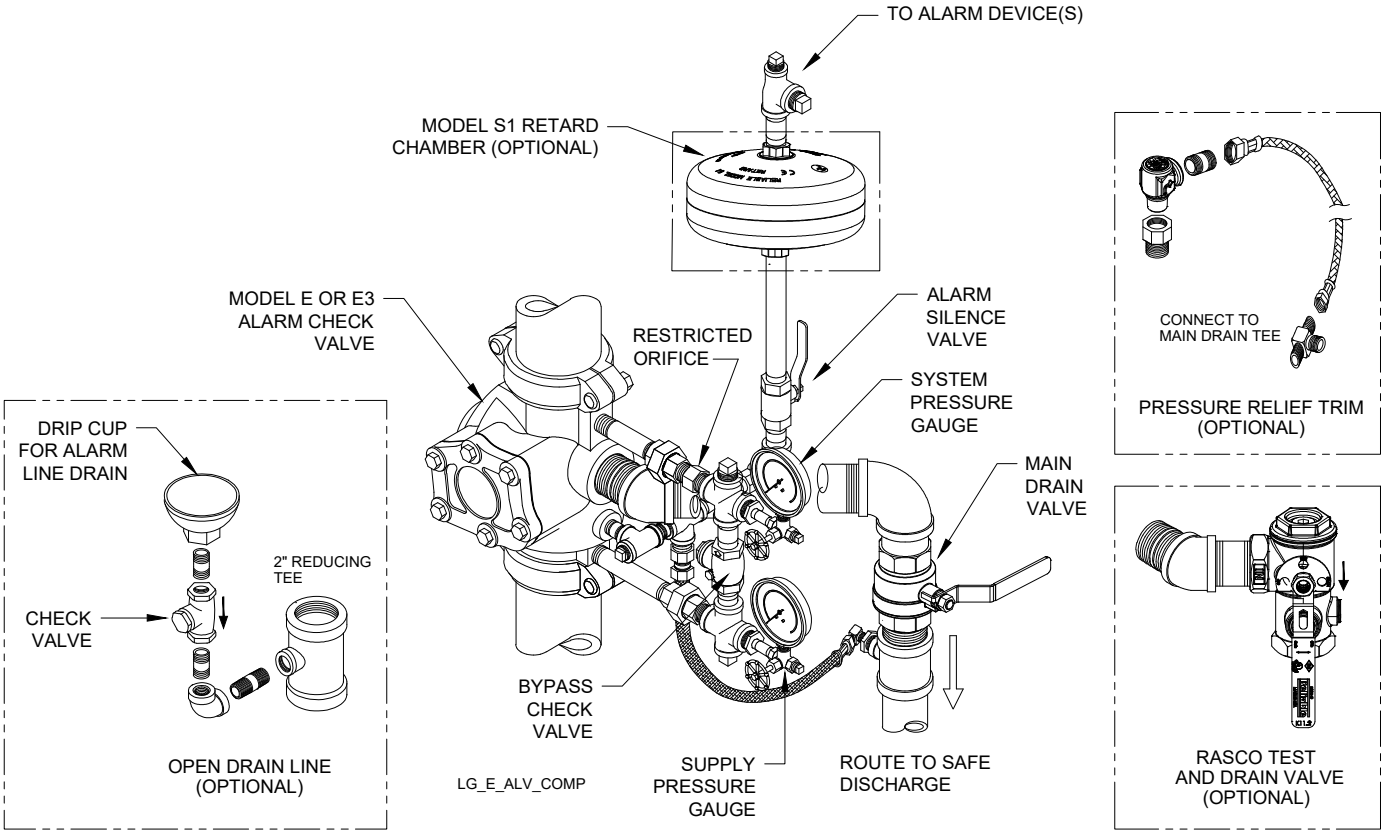

Friction Loss (Equivalent Length of Schedule 40 Pipe) **Table D**

Size	C = 120 ft (m)
2-1/2” (65mm)	17 (5.2)
3” (80mm)	17 (5.2)
4” (100mm)	17 (5.2)
6” (150mm)	27 (8.2)
8” (200mm)	29 (8.8)

Installation

The Model E and E3 Alarm Check Valve shall be installed in accordance with NFPA 13, “Standard for the Installation of Sprinkler Systems,” as well as the requirements of any authorities having jurisdiction. For vertical installation, the direction of flow shall be up through the assembly. For horizontal installation, the clapper hinge pin must be located to the top of the valve.

Verify compatibility of the Model E and E3 Alarm Check Valve materials with the water supply and the environment where the valve will be installed prior to installation. The valve must be installed in a readily visible and accessible location where a minimum temperature of 40°F (4°C) or above must be maintained. Heat tracing of the Model E and E3 Alarm Check Valve and trim is not permitted. Heat tracing can result in the formation of hardened mineral deposits that can prevent proper operation of the valve.

The valve and trim kit have been tested, approved and listed in accordance with UL and FM standards. Hydrostatically testing the valve and trim to pressures higher than their rating is limited to the hydrostatic test as referenced by NFPA 13.

Normal operation and hydrostatic testing do not address the possibility of a water hammer which may damage the valve. A water hammer can create pressure more than the rated pressure of the equipment and should be avoided by all necessary means. Water hammer can occur from (but is not limited to) improper fire pump settings, underground construction work, or improper venting of trapped air in piping.

Failure to follow installation instructions may void the warranty and/or listing of the valve.

Pressure Relief Trim Kit

All wet pipe systems being installed in accordance with the 2010 edition (or newer) of NFPA 13 are required to have a pressure relief valve. For convenience, an optional 175 psi (12.1 bar) pressure relief valve kit is available (see Figures 3 and 6).

Operation

The Reliable Model E Alarm Check Valve is shown in the closed and open positions in Figures 2 and 5. The closed position is maintained as long as the water pressure in the sprinkler system piping above the alarm valve clapper is greater than, or equal to, the supply pressure. A flow of water in the system piping resulting from the operation of one or more automatic sprinkler (or the opening of a valve) causes the clapper to rise off its seat, permitting water to enter the system.

Wet pipe sprinkler systems often contain trapped air. When a pressure surge occurs in the supply line, the increased pressure can compress the confined air and allow water to move into the system resulting in false alarms. The Model E Alarm Check Valve helps limit false alarms under these conditions using two features:

1. The by-pass connection in the trim allows a small amount of water from the pressure surge to by-pass the alarm valve clapper. The excess pressure is captured in the system by a check valve and acts on the top side of the clapper to prevent movement.
2. Should the pressure surge be of sufficient strength or duration to momentarily lift the clapper from its seat, water will enter the intermediate chamber and alarm line. A restricted orifice on the inlet of the retard chamber delays filling of the chamber, thereby delaying operation of any alarm devices above the chamber. Following the pressure surge, a restricted drain orifice allows alarm line water to be automatically drained.

It is important to note that sustained water flow from a pressure surge that lifts the clapper from its seat for an extended period of time will result in a water flow alarm.

Clapper Exercise and Alarm Test

1. Notify the owner and monitoring company that testing is being performed on the system.
2. Confirm that flow from main drain valve will discharge into a safe location.
3. Open the main drain valve.
4. Verify that alarm device (water motor alarm and/or pressure alarm switch) has activated, and signal has been reported to the fire alarm system, if so equipped.
5. Close the main drain valve.
6. When testing is complete, notify the owner and monitoring company that the system has been returned to service.

Note: If the wet pipe system incorporates a vane-type water flow indicator down stream of the alarm valve, it will be necessary to open a test valve downstream of the water flow indicator to test the device.

Maintenance

The owner is responsible for maintaining the fire protection system in proper operating condition. Any system maintenance or testing that involves placing a system out of service may eliminate the fire protection that is provided by the fire protection system. Notify any required authorities having jurisdiction and implement appropriate precautions prior to proceeding.

The Reliable Model E and E3 Alarm Check Valve shall periodically be given a thorough inspection and test. NFPA 25, "Inspection, Testing and Maintenance of Water Based Fire Protection Systems," provides minimum maintenance requirements. Replace any components found to be corroded, damaged, worn or non-operable. Increase the frequency of inspections when the valve is exposed to corrosive conditions or chemicals that could impact materials and/or operation of the assembly.

Troubleshooting

Alarm Devices Not Operating

1. Confirm that alarm devices are properly installed.
2. Verify operation of alarm devices independent of pressure in alarm line trim.
3. Verify that water is pressurizing alarm line when clapper is lifted from seat. This may involve disconnecting the alarm line from the alarm valve.
4. If no water enters the alarm line, remove face plate from alarm valve, lift the clapper, and clear the series of holes in the clapper seat.

Undesired Water Flow in Alarm Line

1. Open the main drain valve, develop sufficient flow to lift alarm valve clapper and flush any loose matter from the clapper seat. Close main drain valve and observe if water flow ceases.

Note: Alarm devices will operate during main drain flow.

2. Close main control valve and relieve pressure below alarm valve clapper (can be done by loosening pressure gauge).
   a. If water is coming from below the clapper, water flow will stop. Water coming from below the clapper indicates the need to replace upper and lower seat O-rings (see Figures 7 & 8).
   b. If water is coming from above the clapper, water flow will continue. Water coming from above the clapper indicates the need to assess the condition of the clapper seat and clapper facing (see Figures 7 & 8). Proper cleaning of components may resolve leakage issues, however, any parts found to be severely worn or damaged should be replaced.

False Alarms

False alarms are generally caused by pressure surges in the water supply and occur when the system loses effective excess pressure above the alarm valve clapper. Where the water supply pressure varies, pressure on the upper (system) pressure gauge should exceed the reading on the lower (water supply) gauge. Identical readings on the system and supply pressure gauges are a visual indication that the excess pressure condition has been lost.

1. Check entire system for tightness, and repair any leaks.
2. Confirm that alarm valve clapper is holding pressure (see step 2b above).
3. Clean and assess the check valve in the bypass trim. Replace check valve if necessary.
4. Confirm the retard chamber and alarm line are draining properly through the restricted drain orifice. Clear orifice as necessary.

Intermittent Alarms

Intermittent alarms generally result from excessive confined air trapped in the sprinkler system piping. When filling (or refilling) the wet pipe system, fill the system slowly while manually venting air at one or more high points on the system. Alternatively, one or more automatic air vents can be installed on the system. Install automatic air vents in accordance with NFPA 13 and manufacturers instructions.

Conditions are known to exist where the combination of devices (including alarm valve, backflow preventor, and inspectors test), and flow results in the rhythmic "pulsing" of water in the system during testing. Depending on the strength of the pulse, it is possible that no alarms activate, or that alarms activate intermittently. When this occurs, it is necessary to adjust the amount of water flow through the system until flow and all devices normalize.

Service Kits

Service kits are available for routine servicing of the valve. Service kits for the Model E Alarm Check Valve include the following components (see Figures 7 & 8).

- Clapper Rubber Facing and Clamping Ring Assembly
- Clamping Ring Screws
- Cover Gasket

2-1/2"/3" Model E/E3 Service Kit: PN 6501200R17
4" Model E/E3 Service Kit: PN 6501200R18
6" Model E/E3 Service Kit: PN 6501200R19
8" Model E/E3 Service Kit: PN 6501200R20

Guarantee

For Reliable Automatic Sprinkler, Co., Inc. guarantee, terms, and conditions, visit www.reliablesprinkler.com.

Ordering Information

Model E/E3 Alarm Check Valve

Size

- 2-1/2” (65mm)
- 3” (80mm)
- 4” (100mm)
- 6” (150mm)
- 8” (200mm)

End Connections

- Flanged Inlet/Flanged Outlet (Model E)
- Flanged Inlet/Grooved Outlet (Model E)
- Grooved Inlet/Grooved Outlet (Model E3)

Orientation

- Vertical
- Horizontal

Trim

- Fully Assembled
- Segemented
- Loose

Note: Model S1 Retard Chamber (Bulletin 430) and Model C Water Motor alarm (Bulletin 612) not included. Order separately.

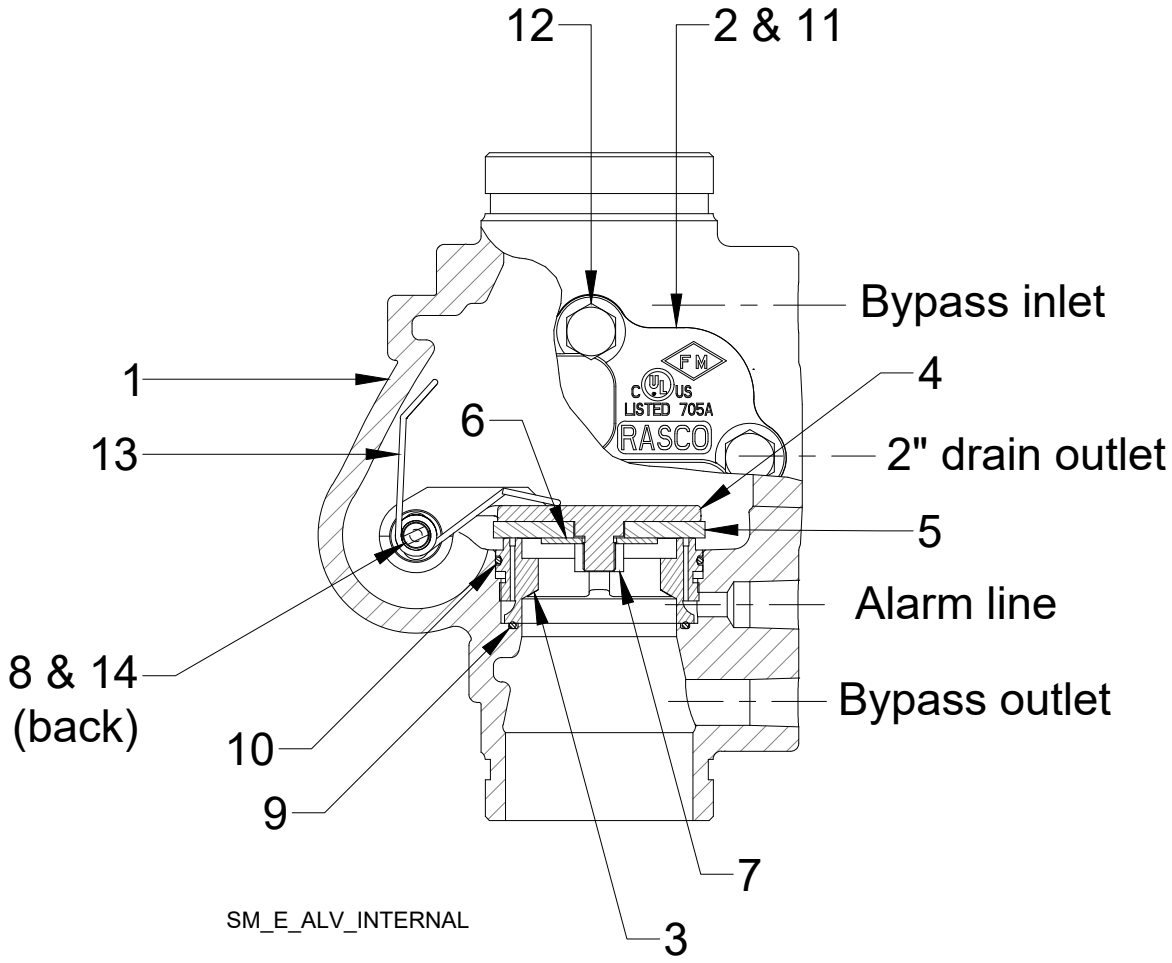

Parts List for Alarm Valves

Item Number	Description	Part Number	Material
1	E or E3 Valve Body	Various	Grey Cast Iron Class 30
2	Cover	92116173	Grey Cast Iron Class 30
3	Seat	96016123	Bronze UNS C83600
4	Clapper, Bushing, Seal, Washer & Nut Assembly	71020320	Grey Cast Iron, Brass, EPDM, Stainless Steel
5	Clapper Rubber Facing	93406123	EPDM
6	Clamping Ring	95306123	Stainless Steel UNS S30400
7	Clamping Ring Nut	94906124	Stainless Steel 18-8
8	Hinge Pin	95006123	Brass UNS C36000
9	Lower Seat O-Ring	95446123	Buna-N
10	Upper Seat O-Ring	95436123	Buna-N
11	Cover Gasket	93706123	Neoprene
12	Cover Bolts	91106123	Steel
13	Clapper Spring	96406123	Bronze UNS C51000
14	Shaft Pipe Plug	98604403	Steel

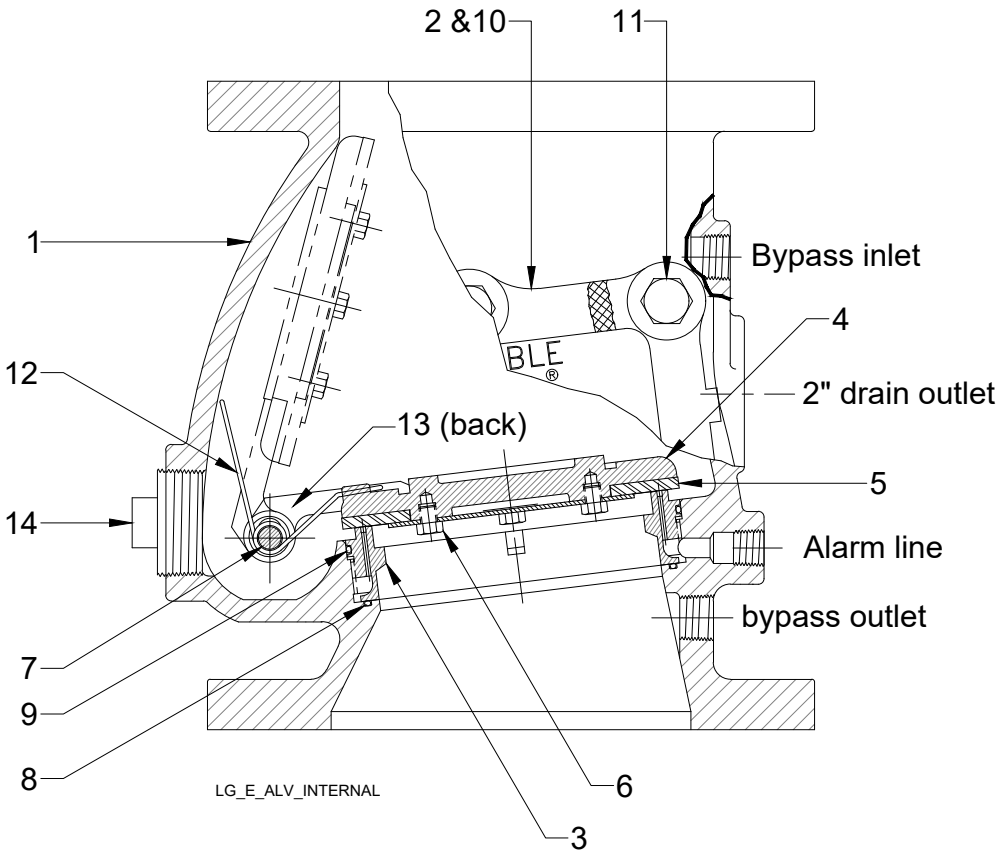

Parts List for Alarm Valves

Item Number	Part Name	Part Number			Material
		4”	6”	8”	
1	E or E3 Valve Body	Various	Various	Various	Gray Cast Iron Class 30
2	Cover	92116124	92116126	92116128	Gray Cast Iron Class 30
3	Seat	96016124	96016126	96016128	Bronze UNS C 83600
4	Clapper & Bushing Assembly	71020424	71020626	71020828	Gray Cast Iron, Brass, EPDM, Stainless Steel
5	Clapper Rubber Facing and Clamping Ring	93416104	93416106	93416108	EPDM & Stainless Steel
6	Clamping Ring Screws or Nut (4” Qty 1) (6” Qty 4) (8” Qty 5)	94906124	95606126	95606126	Stainless Steel 18-8
7	Hinge Pin	95006124	95006126	95006128	Brass UNS C 36000
8	Lower Seat “O” Ring	95436124	95436126	95436128	Buna-N
9	Upper Seat “O” Ring	95446124	95446126	95446128	Buna-N
10	Cover Gasket	93706124	93706126	93706128	Neoprene or Buna-N
11	Cover Bolts (Qty 6)	91106124	91106126	91106126	Steel
12	Clapper Spring	96406124	96406124	96406124	Bronze UNS C 51-000
13	Shaft Pipe Plug	98604402	8604402	98604402	Steel
14	Drain Plug (Except Metric Valves)	95206104	95206104	95206104	Steel

P/N 9999970723