Model F1Res Series Glass Bulb Residential Sprinklers

cULus Listed

Features

- cULus Listed Residential Sprinklers
- Available in pendent and horizontal sidewall orientations
- Decorative finishes available, including recessed escutcheons and conical concealed cover plates

Product Description

Model F1Res Series sprinklers are residential sprinklers with a 3 mm glass bulb operating element. A variety of K-Factors as well as recessed and conical concealed options are available as detailed in this Bulletin.

The F1Res Series sprinklers are specially engineered for fast thermal response to meet the requirements of UL 1626. They are intended for installation in accordance with NFPA 13, 13R, and 13D.

Application

The Model F1Res Series sprinklers cULus Listed Residential sprinklers are intended for use in accordance with NFPA 13, NFPA 13R, or NFPA 13D. The Model F1Res residential sprinklers are cULus Listed for use in residential occupancies and residential portions of any occupancy, where permitted by NFPA 13, NFPA 13R, or NFPA 13D. For NFPA 13R and NFPA 13D applications, the design flow and pressure shall not be less than the minimum flow and pressure specified in the Listed Design Criteria tables in this Bulletin. For NFPA 13 applications, the design density shall be a minimum of 0.1 gpm/sf (4.1 mm/min), but in no case shall the flow and pressure be less than the minimum flow and pressure specified in the Listed Design Criteria tables in this bulletin. Model F1Res Series sprinklers are listed for use in wet systems only.

Important! Reliable fire sprinklers must be handled, stored, and installed in accordance with the guidelines in Caution Sheet 310 and this bulletin. Failure to follow these instructions may result in unintended operation or nonoperation of the fire protection system.

Important Note: Model D wrench and Model GFR2 wrench are no longer compatible with this product. Model W2 (non-recessed) and Model W4 (recessed, concealed) are required.

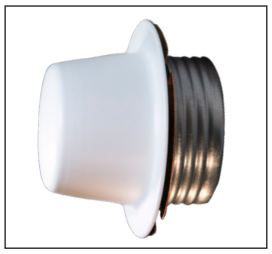

Residential Sprinkler Summary — **Table A**

Sprinkler Model	Sprinkler Identification Number (SIN)	Orientation	K-Factor gpm/psi$^{1/2}$ (lpm/bar$^{1/2}$)	Thread Size NPT or ISO7-1	Installation Options	Max. Coverage Area ft x ft (m x m)
F1Res30	R3511	Pendent	3.0 (43)	1/2	Pendent or Recessed	16 x16 (4.9 x 4.9)
F1Res49	R3516	Pendent	4.9 (71)	1/2	Pendent or Recessed	20 x 20 (6.1 x 6.1)
F1Res58	R3513	Pendent	5.8 (84)	1/2	Pendent or Recessed	20 x 20 (6.1 x 6.1)
F1Res76	R7618	Pendent	7.6 (109)	3/4	Pendent or Recessed	20 x 20 (6.1 x 6.1)
F1Res30 CCP	R3511	Pendent	3.0 (43)	1/2	Conical Concealed	14 x 14 (4.3 x 4.3)
F1Res49 CCP	R3516	Pendent	4.9 (71)	1/2	Conical Concealed	20 x 20 (6.1 x 6.1)
F1Res58 CCP	R3513	Pendent	5.8 (84)	1/2	Conical Concealed	20 x 20 (6.1 x 6.1)
F1Res76 CCP	R7618	Pendent	7.6 (109)	3/4	Conical Concealed	20 x 20 (6.1 x 6.1)
F1Res44 HSW	R3531	Horizontal Sidewall	4.4 (63)	1/2	Recessed	16 x 20 (4.9 x 6.1)
F1Res44 SWC	R3531	Horizontal Sidewall	4.4 (63)	1/2	Conical Concealed	16 x 20 (4.9 x 6.1)
F1Res58 HSW	R3533	Horizontal Sidewall	5.8 (84)	1/2	Recessed	16 x 20 (4.9 x 6.1)
F1Res 58 HSWX	RA3533	Horizontal Sidewall	5.8 (84)	1/2	Recessed	14 x 26 (4.3 x 7.9)

Note: Please note SIN difference between F1Res58 HSW (R3533) and F1Res58 HSWX (RA3533).

Model F1Res30 Residential Pendent Sprinkler & Model F2 Escutcheon — SIN R3511

Technical Specifications
- **Style:** Pendent and Recessed Pendent
- **Threads:** 1/2" NPT or ISO7-1R1/2
- **Nominal K-Factor:** 3.0 (43 metric)
- **Max. Working Pressure:** 175 psi (12 bar)

Material Specifications
- **Thermal Sensor:** 3 mm glass bulb
- **Sprinkler Frame:** Brass Alloy
- **Button:** Copper Alloy
- **Sealing Assembly:** Nickel Alloy with PTFE
- **Load Screw:** Bronze Alloy
- **Deflector:** Bronze Alloy

Finishes
(See Table N)

Sensitivity
Fast-response

Temperature Ratings
155°F (68°C)
175°F (79°C)

Recessed Escutcheons
F2 Recessed

Sprinkler Wrenches
Model W2
Model W4 (Recessed)

Model F1Res30 Residential Pendent Sprinkler Components and Installation Dimensions — Figure 1

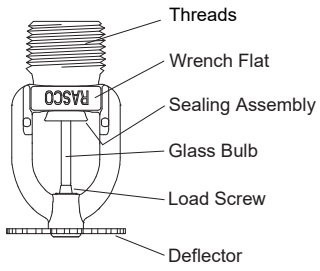

Components

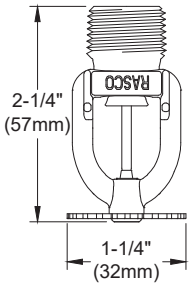

Dimensions

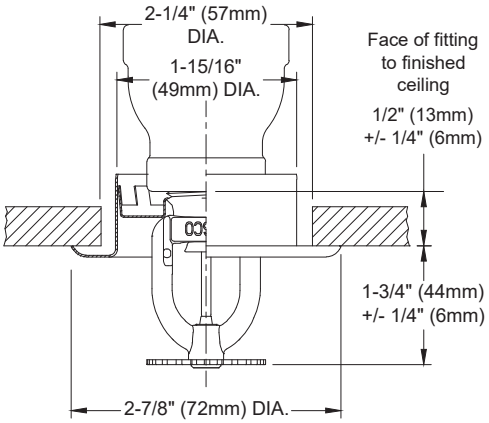

F2 Recessed Escutcheon Installation

Model F1Res30 Residential Pendent Sprinkler Hydraulic Design Criteria — Table B

Minimum Flow and Residual Pressure in Wet Pipe Systems[1]			
Maximum Coverage Area[2] ft. x ft.(m x m)	**Flow gpm (l/min)**	**Pressure psi (bar)**	**Deflector to Ceiling Distance**
12 x 12 (3.7 x 3.7)	8 (30)	7.0 (0.48)	1 to 4 inches (25 to 100 mm)
14 x 14 (4.3 x 4.3)	10 (38)	11.0 (0.76)	
15 x 15 (4.6 x 4.6)	12 (45)	16.0 (1.1)	
16 x 16 (4.9 x 4.9)	13 (49)	18.8 (1.3)	

Notes:
1. For NFPA 13 installations the flow per sprinkler must be the greater of: (1) the flow listed in the table above or (2) the flow required to achieve a minimum design density of 0.1 gpm/sq ft over the design area of the sprinkler.
2. For coverage area dimensions less than those listed above, use the minimum required flow for the next larger max. coverage area listed.

Model F1Res49 Residential Sprinkler & Models F1 & F2 Escutcheons — SIN R3516

Technical Specifications
- **Style:** Pendent and Recessed Pendent
- **Threads:** 1/2" NPT or ISO7-1R1/2
- **Nominal K-Factor:** 4.9 (71 metric)
- **Max. Working Pressure:** 175 psi (12 bar)

Material Specifications
- **Thermal Sensor:** 3 mm glass-bulb
- **Sprinkler Frame:** Brass Alloy
- **Button:** Copper Alloy
- **Sealing Assembly:** Nickel Alloy with PTFE
- **Load Screw:** Bronze Alloy
- **Deflector:** Bronze Alloy

Finishes
(See Table N)

Sensitivity
Fast-response

Temperature Ratings
155°F (68°C)
175°F (79°C)

Recessed Escutcheons
F1 Recessed
F2 Recessed

Sprinkler Wrenches
Model W2
Model W4 (Recessed)

Model F1Res49 Residential Pendent Sprinkler Components and Installation Dimensions — Figure 2

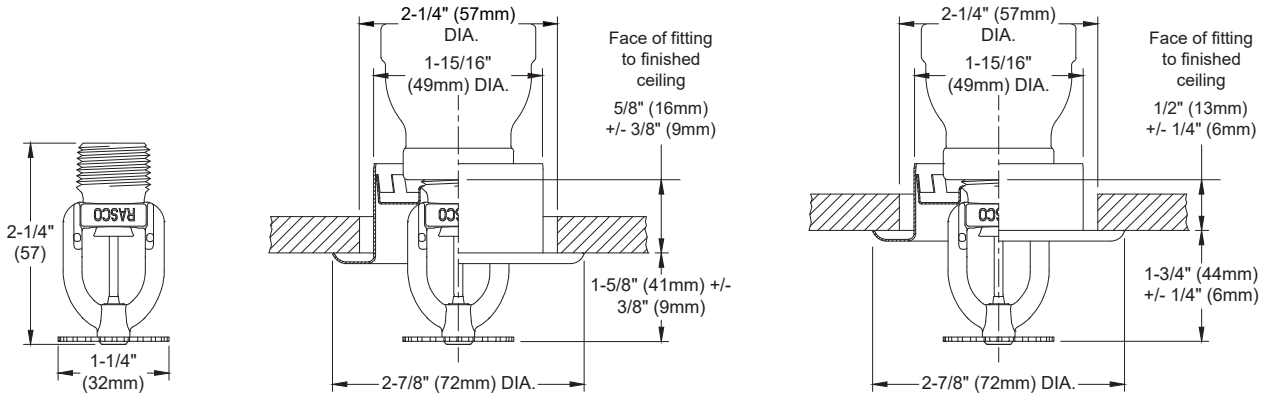

Model F1Res49 Residential Pendent Sprinkler Hydraulic Design Criteria — Table C

Minimum Flow and Residual Pressure in Wet Pipe Systems[1]			
Maximum Coverage Area[2] ft. x ft. (m x m)	**Flow gpm (l/min)**	**Pressure psi (bar)**	**Deflector to Ceiling Distance**
12 x 12 (3.7 x 3.7)	13 (49)	7.0 (0.48)	1 to 4 inches (25 to 100 mm)
14 x 14 (4.3 x 4.3)	13 (49)	7.0 (0.48)	
16 x 16 (4.9 x 4.9)	13 (49)	7.0 (0.48)	
18 x 18 (5.5 x 5.5)	17 (64)	12.0 (0.83)	
20 x 20 (6.1 x 6.1)	20 (76)	16.7 (1.15)	
12 x 12 (3.7 x 3.7)	15 (57)	9.4 (0.65)	4 to 8 inches (100 to 200 mm)
14 x 14 (4.3 x 4.3)	16 (61)	10.7 (0.74)	
16 x 16 (4.9 x 4.9)	17 (64)	12.0 (0.83)	
18 x 18 (5.5 x 5.5)	19 (72)	15.0 (1.03)	
20 x 20 (6.1 x 6.1)	22 (83)	20.2 (1.39)	

Notes:
1. For NFPA 13 installations the flow per sprinkler must be the greater of: (1) the flow listed in the table above or (2) the flow required to achieve a minimum design density of 0.1 gpm/sq ft over the design area of the sprinkler.
2. For coverage area dimensions less than those listed above, use the minimum required flow for the next larger max. coverage area listed.

Model F1Res58 Residential Pendent Sprinkler & F1 & F2 Recessed Escutcheons — SIN R3513

Technical Specifications
- **Style:** Pendent and Recessed Pendent
- **Threads:** 1/2" NPT or ISO7-1R1/2
- **Nominal K-Factor:** 5.8 (84 metric)
- **Max. Working Pressure:** 175 psi (12 bar)

Material Specifications
- **Thermal Sensor:** 3 mm glass bulb
- **Sprinkler Frame:** Brass Alloy
- **Button:** Copper Alloy
- **Sealing Assembly:** Nickel Alloy with PTFE
- **Load Screw:** Bronze Alloy
- **Deflector:** Bronze Alloy

Finishes
(See Table N)

Sensitivity
Fast-response

Temperature Ratings
155°F (68°C)
175°F (79°C)

Recessed Escutcheons
F1 Recessed
F2 Recessed

Sprinkler Wrenches
Model W2
Model W4 (Recessed)

Model F1Res58 Residential Pendent Sprinkler Components and Installation Dimensions — Figure 3

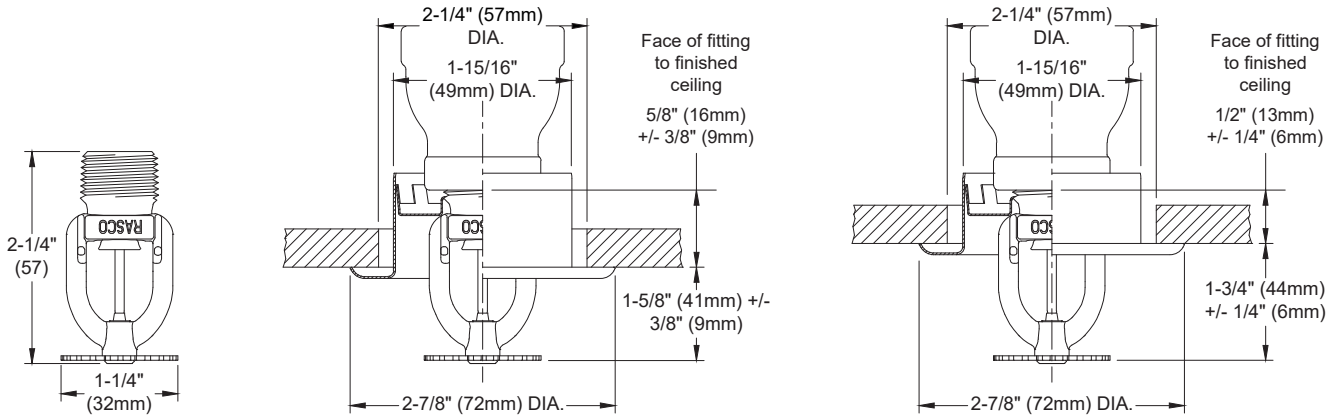

Model F1Res58 Residential Pendent Sprinkler Hydraulic Design Criteria — Table D

Minimum Flow and Residual Pressure in Wet Pipe Systems[1]			
Maximum Coverage Area[2] ft. x ft. (m x m)	**Flow gpm (l/min)**	**Pressure psi (bar)**	**Deflector to Ceiling Distance**
16 x 16 (4.9 x 4.9)	16 (61)	7.6 (0.52)	1 to 4 inches (25 to 100 mm)
18 x 18 (5.5 x 5.5)	19 (72)	10.8 (0.75)	
20 x 20 (6.1 x 6.1)	22 (83)	14.4 (1.0)	

Notes:
1. For NFPA 13 installations the flow per sprinkler must be the greater of: (1) the flow listed in the table above or (2) the flow required to achieve a minimum design density of 0.1 gpm/sq ft over the design area of the sprinkler.
2. For coverage area dimensions less than those listed above, use the minimum required flow for the next larger max. coverage area listed.

Model F1Res76 Residential Pendent Sprinkler & F1 & F2 Escutcheons — SIN R7618

Technical Specifications
- **Style:** Pendent and Recessed Pendent
- **Threads:** 3/4" NPT or ISO7-1R3/4
- **Nominal K-Factor:** 7.6 (109 metric)
- **Max. Working Pressure:** 175 psi (12 bar)

Material Specifications
- **Thermal Sensor:** 3 mm glass bulb
- **Sprinkler Frame:** Brass Alloy
- **Button:** Copper Alloy
- **Sealing Assembly:** Nickel Alloy with PTFE
- **Load Screw:** Bronze Alloy
- **Deflector:** Bronze Alloy

Finishes
(See Table N)

Sensitivity
Fast-response

Temperature Ratings
155°F (68°C)
175°F (79°C)

Recessed Escutcheons
F1 Recessed
F2 Recessed

Sprinkler Wrenches
Model W2
Model W4 (Recessed)

Model F1Res76 Residential Pendent Sprinkler Components and Installation Dimensions — Figure 4

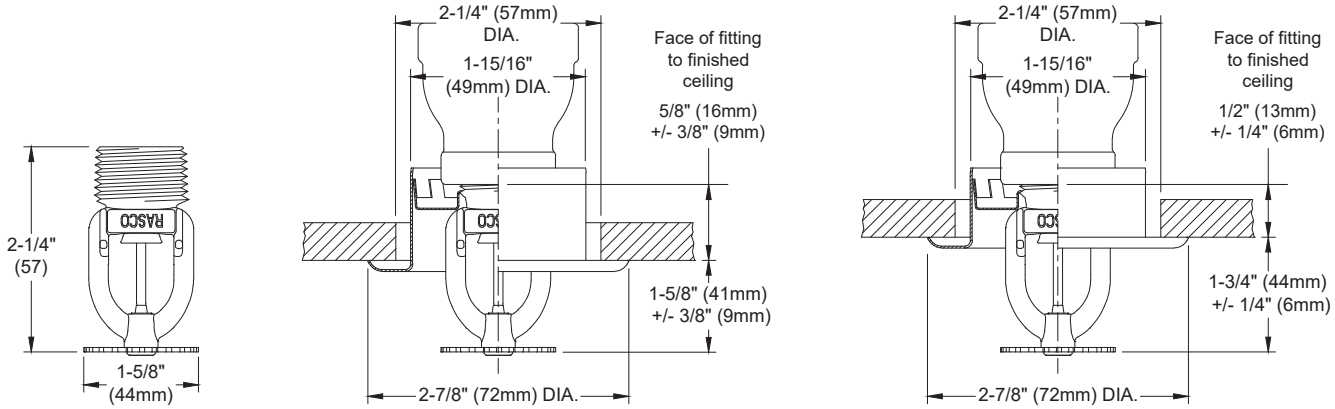

Dimensions | F1 Recessed Escutcheon Installation | F2 Recessed Escutcheon Installation

Model F1Res76 Residential Pendent Sprinkler Hydraulic Design Criteria — Table E

Minimum Flow and Residual Pressure in Wet Pipe Systems[1]			
Maximum Coverage Area[2] ft. x ft. (m x m)	**Flow gpm (l/min)**	**Pressure psi (bar)**	**Deflector to Ceiling Distance**
18 x 18 (5.5 x 5.5)	21 (80)	7.6 (0.52)	1 to 4 inches (25 to 100 mm)
20 x 20 (6.1 x 6.1)	23 (87)	9.2 (0.63)	

Notes:
1. For NFPA 13 installations the flow per sprinkler must be the greater of: (1) the flow listed in the table above or (2) the flow required to achieve a minimum design density of 0.1 gpm/sq ft over the design area of the sprinkler.
2. For coverage area dimensions less than those listed above, use the minimum required flow for the next larger max. coverage area listed.

Model F1Res30 CCP Conical Concealed Pendent & Model FP Recessed Escutcheon Pendent Sprinkler

SIN R3511

Technical Specifications
- **Style:** Conical Concealed Pendent and Recessed Pendent
- **Threads:** 1/2" NPT or ISO7-1R1/2
- **Nominal K-Factor:** 3.0 (43 metric)
- **Max. Working Pressure:** 175 psi (12 bar)

Material Specifications
- **Thermal Sensor:** 3 mm glass bulb
- **Sprinkler Frame:** Brass Alloy
- **Button:** Copper Alloy
- **Sealing Assembly:** Nickel Alloy with PTFE
- **Load Screw:** Bronze Alloy
- **Deflector:** Bronze Alloy

Finishes
(See Table N)

Sensitivity
Fast-response

Temperature Ratings
155°F (68°C)

Recessed Escutcheons/Cover Plates
CCP Conical Concealed Plate 135°F (57°C)*
FP Recessed*

Sprinkler Wrenches
Model W4

***Note:** Model F1Res sprinklers with Model FP recessed escutcheon or Model CCP cover plate may not be used where the pressure above the ceiling is positive with respect to the protected area. Ensure openings in the sprinkler cup are unobstructed following installation.

Model F1Res30 CCP and FP Recessed Pendent Sprinkler Installation Dimensions

Figure 5

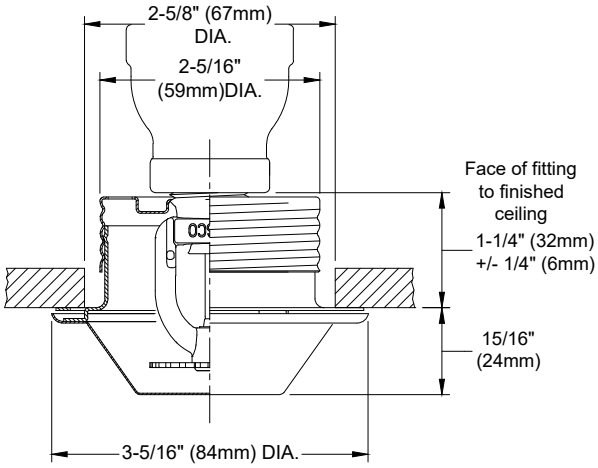

CCP Recessed Escutcheon Installation

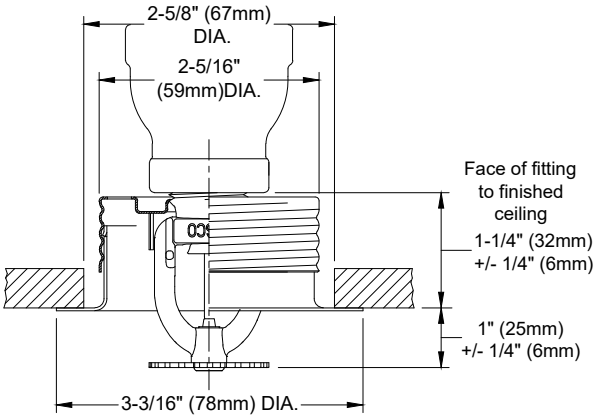

FP Recessed Escutcheon Installation

Model F1Res30 CCP Pendent & FP Recessed Pendent Sprinkler Hydraulic Design Criteria

Table F

Minimum Flow and Residual Pressure in Wet Pipe Systems[1]			
Maximum Coverage Area[2] ft. x ft. (m x m)	**Flow gpm (l/min)**	**Pressure psi (bar)**	**Deflector to Ceiling Distance**
12 x 12 (3.7 x 3.7)	8 (30)	7.0 (0.48)	1/2 to 1 inch (13 to 25 mm)
14 x 14 (4.3 x 4.3)	11 (38)	13.4 (0.92)	

Notes:
1. For NFPA 13 installations the flow per sprinkler must be the greater of: (1) the flow listed in the table above or (2) the flow required to achieve a minimum design density of 0.1 gpm/sq ft over the design area of the sprinkler.
2. For coverage area dimensions less than those listed above, use the minimum required flow for the next larger max. coverage area listed.
3. The sprinkler must be installed into a ceiling with the listed cover plate installed.

Model F1Res49 CCP Conical Concealed Pendent & Model FP Recessed Escutcheon Pendent Sprinkler — SIN R3516

Technical Specifications
- **Style:** Conical Concealed Pendent and Recessed Pendent
- **Threads:** 1/2" NPT or ISO7-1R1/2
- **Nominal K-Factor:** 4.9 (71 metric)
- **Max. Working Pressure:** 175 psi (12 bar)

Material Specifications
- **Thermal Sensor:** 3 mm glass bulb
- **Sprinkler Frame:** Brass Alloy
- **Button:** Copper Alloy
- **Sealing Assembly:** Nickel Alloy with PTFE
- **Load Screw:** Bronze Alloy
- **Deflector:** Bronze Alloy

Finishes
(See Table N)

Sensitivity
Fast-response

Temperature Ratings
155°F (68°C)

Recessed Escutcheons/Cover Plates
CCP Conical Concealed Plate 135°F (57°C)*
FP Recessed*

Sprinkler Wrenches
Model W4

***Note:** Model F1Res sprinklers with Model FP recessed escutcheon or Model CCP cover plate may not be used where the pressure above the ceiling is positive with respect to the protected area. Ensure openings in the sprinkler cup are unobstructed following installation.

Model F1Res49 CCP & FP Recessed Pendent Sprinkler Installation Dimensions — Figure 6

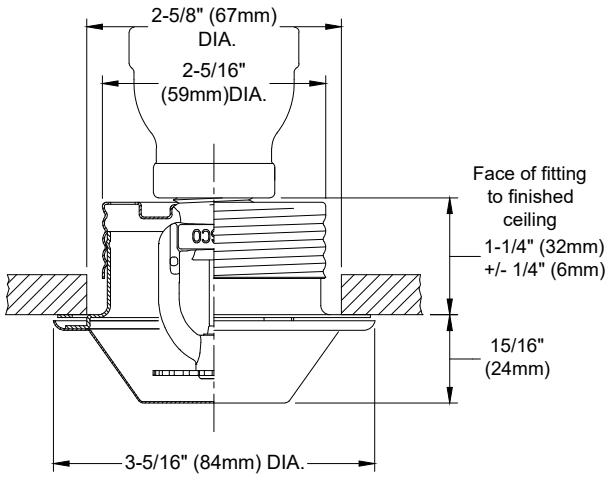

CCP Recessed Escutcheon Installation

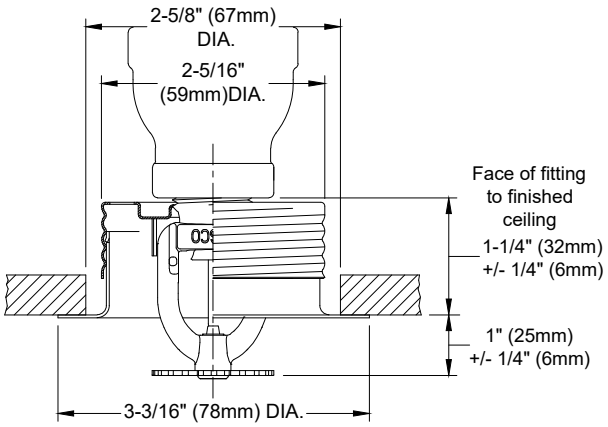

FP Recessed Escutcheon Installation

Model F1Res49 CCP Pendent and FP Recessed Pendent Hydraulic Design Criteria — Table G

Minimum Flow and Residual Pressure in Wet Pipe Systems[1]			
Maximum Coverage Area[2] ft. x ft. (m x m)	**Flow gpm (l/min)**	**Pressure psi (bar)**	**Deflector to Ceiling Distance**
14 x 14 (4.3 x 4.3)	13 (49)	7.0 (0.48)	1/2 to 1 inch (13 to 25 mm)
16 x 16 (4.9 x 4.9)	14 (53)	8.2 (0.57)	
18 x 18 (5.5 x 5.5)	18 (68)	13.5 (0.93)	
20 x 20 (6.1 x 6.1)	20 (76)	16.7 (1.15)	

Notes:
1. For NFPA 13 installations the flow per sprinkler must be the greater of: (1) the flow listed in the table above or (2) the flow required to achieve a minimum design density of 0.1 gpm/sq ft over the design area of the sprinkler.
2. For coverage area dimensions less than those listed above, use the minimum required flow for the next larger max. coverage area listed.
3. The sprinkler must be installed into a ceiling with the listed cover plate installed.

Model F1Res58 CCP Conical Concealed Pendent & Model FP Recessed Escutcheon Pendent Sprinkler — SIN R3513

Technical Specifications
- **Style:** Conical Concealed Pendent and Recessed Pendent
- **Threads:** 1/2" NPT or ISO7-1R1/2
- **Nominal K-Factor:** 5.8 (84 metric)
- **Max. Working Pressure:** 175 psi (12 bar)

Material Specifications
- **Thermal Sensor:** 3 mm glass bulb
- **Sprinkler Frame:** Brass Alloy
- **Button:** Copper Alloy
- **Sealing Assembly:** Nickel Alloy with PTFE
- **Load Screw:** Bronze Alloy
- **Deflector:** Bronze Alloy

Finishes
(See Table N)

Sensitivity
Fast-response

Temperature Ratings
155°F (68°C)

Recessed Escutcheons/Cover Plates
CCP Conical Concealed Plate 135°F (57°C)*
FP Recessed*

Sprinkler Wrenches
Model W4

***Note:** Model F1Res sprinklers with Model FP recessed escutcheon or Model CCP cover plate may not be used where the pressure above the ceiling is positive with respect to the protected area. Ensure openings in the sprinkler cup are unobstructed following installation.

Model F1Res58 CCP and FP Recessed Pendent Sprinkler Installation Dimensions — Figure 7

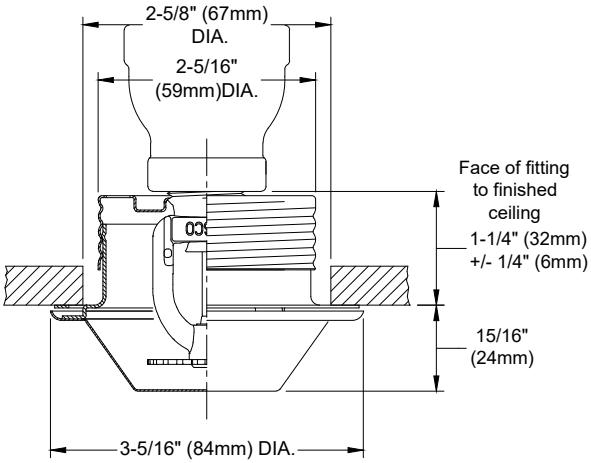

CCP Recessed Escutcheon Installation

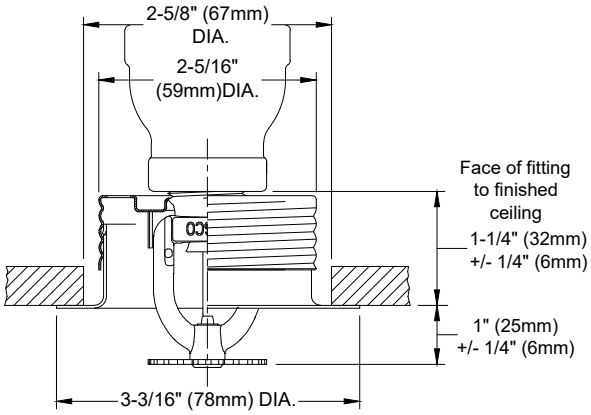

FP Recessed Escutcheon Installation

Model F1Res58 CCP Pendent & FP Recessed Pendent Hydraulic Design Criteria — Table H

Minimum Flow and Residual Pressure in Wet Pipe Systems[1]			
Maximum Coverage Area[2] ft. x ft. (m x m)	**Flow gpm (l/min)**	**Pressure psi (bar)**	**Deflector to Ceiling Distance**
16 x 16 (4.9 x 4.9)	16 (61)	7.6 (0.52)	1/2 to 1 inch (13 to 25 mm)
18 x 18 (5.5 x 5.5)	19 (72)	10.8 (0.75)	
20 x 20 (6.1 x 6.1)	22 (83)	14.4 (1.0)	

Notes:
1. For NFPA 13 installations the flow per sprinkler must be the greater of: (1) the flow listed in the table above or (2) the flow required to achieve a minimum design density of 0.1 gpm/sq ft over the design area of the sprinkler.
2. For coverage area dimensions less than those listed above, use the minimum required flow for the next larger max. coverage area listed.
3. The sprinkler must be installed into a ceiling with the listed cover plate installed.

Model F1Res76 CCP Conical Concealed Pendent and Model FP Recessed Escutcheon Pendent Sprinkler — SIN R7618

Technical Specifications
- **Style:** Conical Concealed Pendent and Recessed Pendent
- **Threads:** 3/4" NPT or ISO7-1R3/4
- **Nominal K-Factor:** 7.6 (109 metric)
- **Max. Working Pressure:** 175 psi (12 bar)

Material Specifications
- **Thermal Sensor:** 3 mm glass bulb
- **Sprinkler Frame:** Brass Alloy
- **Button:** Copper Alloy
- **Sealing Assembly:** Nickel Alloy with PTFE
- **Load Screw:** Bronze Alloy
- **Deflector:** Bronze Alloy

Finishes
(See Table N)

Sensitivity
Fast-response

Temperature Ratings
155°F (68°C)

Recessed Escutcheons/Cover Plates
CCP Conical Concealed Plate 135°F (57°C)*
FP Recessed*

Sprinkler Wrenches
Model W4

***Note:** Model F1Res sprinklers with Model FP recessed escutcheon or Model CCP cover plate may not be used where the pressure above the ceiling is positive with respect to the protected area. Ensure openings in the sprinkler cup are unobstructed following installation.

Model F1Res76 CCP and FP Recessed Pendent Sprinkler Installation Dimensions — Figure 8

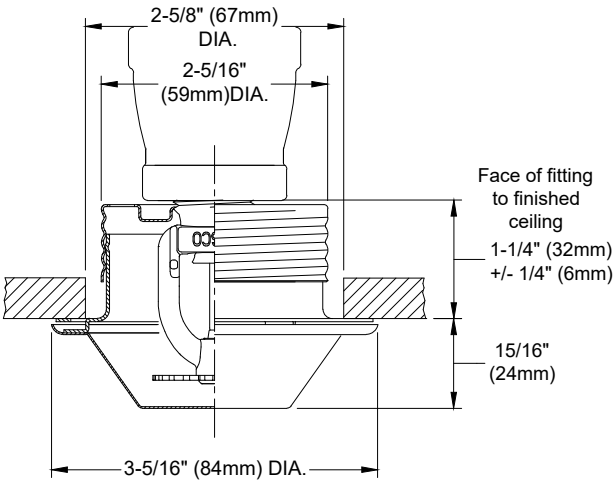

CCP Recessed Escutcheon Installation

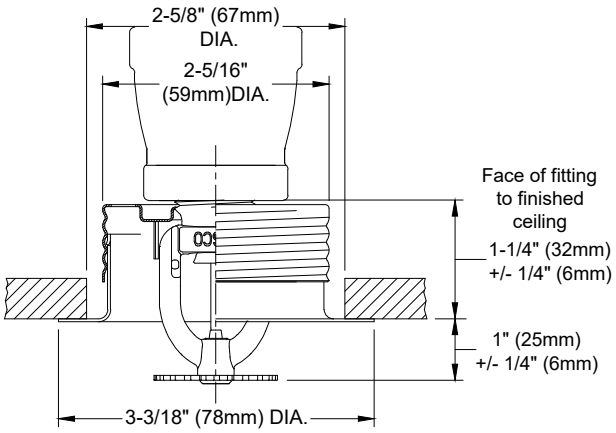

FP Recessed Escutcheon Installation

Model F1Res76 CCP Pendent & FP Recessed Pendent Hydraulic Design Criteria — Table I

Minimum Flow and Residual Pressure in Wet Pipe Systems[1]			
Maximum Coverage Area[2] ft. x ft. (m x m)	**Flow gpm (l/min)**	**Pressure psi (bar)**	**Deflector to Ceiling Distance**
16 x 16 (4.9 x 4.9)	21 (80)	7.6 (0.52)	1/2 to 1 inch (13 to 25 mm)
18 x 18 (5.5 x 5.5)	22 (83)	8.4 (0.58)	
20 x 20 (6.1 x 6.1)	25 (95)	10.8 (0.75)	

Notes:
1. For NFPA 13 installations the flow per sprinkler must be the greater of: (1) the flow listed in the table above or (2) the flow required to achieve a minimum design density of 0.1 gpm/sq ft over the design area of the sprinkler.
2. For coverage area dimensions less than those listed above, use the minimum required flow for the next larger max. coverage area listed.
3. The sprinkler must be installed into a ceiling with the listed cover plate installed.

Model F1Res44 Horizontal Sidewall Sprinkler & Model F2 Recessed Escutcheon — SIN R3531

Technical Specifications
Style: Sidewall and Recessed Sidewall
Threads: 1/2" NPT or ISO7-1R1/2
Nominal K-Factor: 4.4 (63 metric)
Max. Working Pressure: 175 psi (12 bar)

Material Specifications
Thermal Sensor: 3 mm glass bulb
Sprinkler Frame: Brass Alloy
Button: Copper Alloy
Sealing Assembly: Nickel Alloy with PTFE
Load Screw: Bronze Alloy
Deflector: Bronze Alloy

Finishes
(See Table N)
Sensitivity
Fast-response
Temperature Ratings
155°F (68°C)
175°F (79°C)
Recessed Escutcheons
F2 Recessed
Sprinkler Wrenches
Model W2
Model W4 (Recessed)

Model F1Res44 Horizontal Sidewall Sprinkler Installation Dimensions — Figure 9

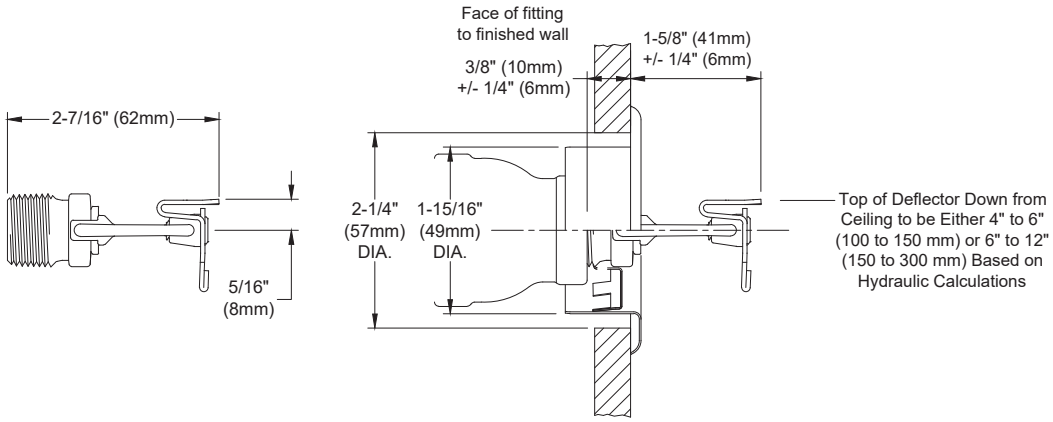

Dimensions — F2 Recessed Escutcheon Installation

Model F1Res44 Horizontal Sidewall Sprinkler Hydraulic Design Criteria — Table J

Minimum Flow and Residual Pressure in Wet Pipe Systems[1]			
Maximum Coverage Area[2] ft. x ft. (m x m)	**Flow gpm (l/min)**	**Pressure psi (bar)**	**Deflector to Ceiling Distance**
12 x 12 (3.7 x 3.7)	12 (45)	7.5 (0.52)	4 to 6 inches (100 to 150 mm)
14 x 14 (4.3 x 4.3)	14 (53)	10.2 (0.70)	
15 x 15 (4.6 x 4.6)	15 (57)	11.6 (0.80)	
16 x 16 (4.9 x 4.9)	16 (61)	13.3 (0.92)	
16 x 18 (4.9 x 5.5)	18 (68)	16.8 (1.16)	
16 x 20 (4.9 x 6.1)	23 (87)	27.4 (1.89)	
18 x 18 (5.5 x 5.5)	19 (72)	18.7 (1.29)	
12 x 12 (3.7 x 3.7)	14 (53)	10.2 (0.7)	6 to 12 inches (150 to 300 mm)
14 x 14 (4.3 x 4.3)	16 (61)	13.2 (0.91)	
15 x 15 (4.6 x 4.6)	16 (61)	13.2 (0.91)	
16 x 16 (4.9 x 4.9)	17 (64)	15.0 (1.03)	
16 x 18 (4.9 x 5.5)	20 (76)	20.7 (1.43)	
16 x 20 (4.9 x 6.1)	23 (87)	27.4 (1.89)	

Notes:
1. For NFPA 13 installations the flow per sprinkler must be the greater of: (1) the flow listed in the table above or (2) the flow required to achieve a minimum design density of 0.1 gpm/sq ft over the design area of the sprinkler.
2. For coverage area dimensions less than those listed above, use the minimum required flow for the next larger max. coverage area listed.

Model F1Res44 SWC Conical Concealed Horizontal Sidewall Sprinkler — SIN R3531

Technical Specifications
- **Style:** Conical Concealed Sidewall
- **Threads:** 1/2" NPT or ISO 7-1 R1/2
- **Nominal K-Factor:** 4.4 (63 metric)
- **Max. Working Pressure:** 175 psi (12 bar)

Material Specifications
- **Thermal Sensor:** 3 mm glass-bulb
- **Sprinkler Frame:** Brass Alloy
- **Button:** Copper Alloy
- **Sealing Assembly:** Nickel Alloy with PTFE
- **Load Screw:** Bronze Alloy
- **Deflector:** Bronze Alloy

Finishes
(See Table N)

Sensitivity
Fast-response

Temperature Ratings
155°F (68°C)
175°F (79°C) [1]

Cover Plates
SWC Conical Concealed Plate[2]
SWC-2 (Slotted) Conical Concealed Plate[3]

Sprinkler Wrenches
Model W4

Note:
[1] Not for installation where the maximum ceiling temperature exceeds 100°F due to cover plate temperature rating.
[2] 135°F SWC Conical Concealed Plate for 155°F (68°C) sprinklers
[3] 135°F SWC-2 (Slotted) Conical Concealed Plate for 175°F (79°C) sprinklers

Model F1Res44 SWC Conical Concealed Horizontal Sidewall Sprinkler and Installation Dimensions — Figure 10

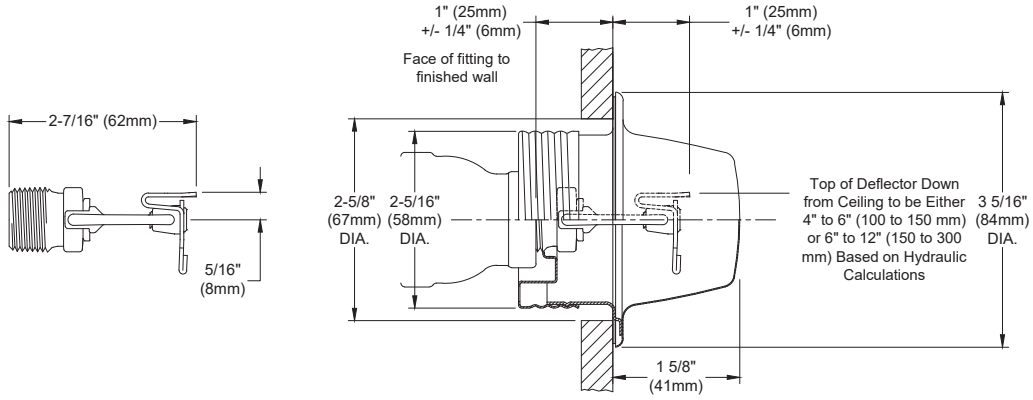

Dimensions

SWC & SWC-2 Concealed Cover Plate Installation

Note: Model F1Res44 sprinklers with SWC cover plate may not be used where the pressure behind the sprinkler is positive with respect to the pressure in the protected area. Ensure that openings in the sprinkler cup are unobstructed following installation.

Model F1Res44 SWC Conical Concealed Horizontal Sidewall Sprinkler Hydraulic Design Criteria — Table K

Minimum Flow and Residual Pressure in Wet Pipe Systems[1]					
Maximum Coverage Area[2] ft. x ft. (m x m)	Ordinary Temperature Rating 155°F (68°C)		Intermediate Temperature Rating 175°F (79°C)		Deflector to Ceiling Distance
	Flow gpm (l/min)	Pressure psi (bar)	Flow gpm (l/min)	Pressure psi (bar)	
12 x 12 (3.7 x 3.7)	13 (49)	8.7 (0.60)	14 (53)	10.2 (0.7)	4 to 6 inches (100 to 150 mm)
14 x 14 (4.3 x 4.3)	14 (53)	10.2 (0.7)	14 (53)	10.2 (0.7)	
15 x 15 (4.6 x 4.6)	16 (61)	13.2 (0.91)	– –	– –	
16 x 16 (4.9 x 4.9)	17 (64)	15.0 (1.03)	– –	– –	
16 x 18 (5.5 x 5.5)	19 (72)	18.7 (1.31)	– –	– –	
16 x 20 (4.9 x 6.1)	23 (87)	27.4 (1.89)	– –	– –	
12 x 12 (3.7 x 3.7)	14 (53)	10.2 (0.7)	– –	– –	6 to 12 inches (150 to 300 mm)
14 x 14 (4.3 x 4.3)	15 (57)	11.7 (0.81)	– –	– –	
15 x 15 (4.6 x 4.6)	17 (64)	15.0 (1.03)	– –	– –	
16 x 16 (4.9 x 4.9)	18 (68)	16.8 (1.16)	– –	– –	
16 x 18 (4.9 x 5.5)	20 (76)	20.7 (1.43)	– –	– –	

Notes:
1. For NFPA 13 installations the flow per sprinkler must be the greater of: (1) the flow listed in the table above or (2) the flow required to achieve a minimum design density of 0.1 gpm/sq ft over the design area of the sprinkler.
2. For coverage area dimensions less than those listed above, use the minimum required flow for the next larger max. coverage area listed.

Model F1Res58 Horizontal Sidewall Sprinkler & Model F2 Recessed Escutcheon — SIN R3533

Technical Specifications
- **Style:** Sidewall and Recessed Sidewall
- **Threads:** 1/2" NPT or ISO7-1R1/2
- **Nominal K-Factor:** 5.8 (84 metric)
- **Max. Working Pressure:** 175 psi (12 bar)

Material Specifications
- **Thermal Sensor:** 3 mm glass bulb
- **Sprinkler Frame:** Brass Alloy
- **Button:** Copper Alloy
- **Sealing Assembly:** Nickel Alloy with PTFE
- **Load Screw:** Bronze Alloy
- **Deflector:** Bronze Alloy

Finishes
(See Table N)

Sensitivity
Fast-response

Temperature Ratings
155°F (68°C)
175°F (79°C)

Recessed Escutcheons
F2 Recessed

Sprinkler Wrenches
Model W2
Model W4 (Recessed)

Model F1Res58 Residential Horizontal Sidewall Sprinkler Installation Dimensions — Figure 11

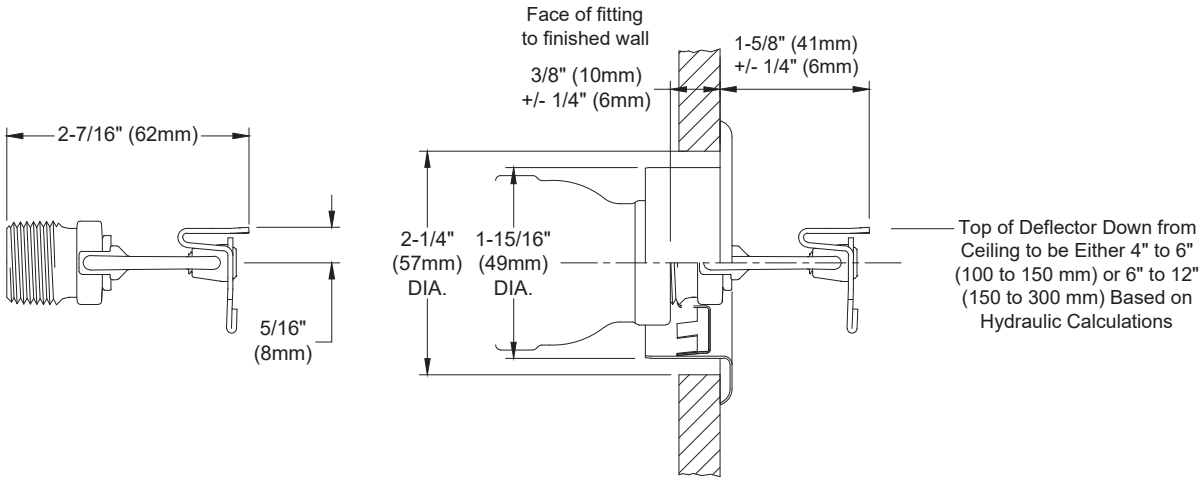

Dimensions — F2 Recessed Escutcheon Installation

Model F1Res58 Horizontal Sidewall Sprinkler Hydraulic Design Criteria — Table L

Minimum Flow and Residual Pressure in Wet Pipe Systems[1]			
Maximum Coverage Area[2] ft. x ft. (m x m)	**Flow gpm (l/min)**	**Pressure psi (bar)**	**Deflector to Ceiling Distance**
12 x 12 (3.7 x 3.7)	16 (61)	7.6 (0.52)	4 to 6 inches (100 to 150 mm)
14 x 14 (4.3 x 4.3)	18 (68)	9.7 (0.66)	
15 x 15 (4.6 x 4.6)	19 (72)	10.7 (0.74)	
16 x 16 (4.9 x 4.9)	21 (80)	13.2 (0.91)	
16 x 18 (4.9 x 5.5)	25 (95)	18.6 (1.28)	
16 x 20 (4.9 x 6.1)	29 (110)	25.0 (1.72)	
12 x 12 (3.7 x 3.7)	22 (83)	14.4 (1.0)	6 to 12 inches (150 to 300 mm)
14 x 14 (4.3 x 4.3)	22 (83)	14.4 (1.0)	
15 x 15 (4.6 x 4.6)	24 (91)	17.1 (1.18)	
16 x 16 (4.9 x 4.9)	26 (98)	20.1 (1.39)	
16 x 18 (4.9 x 5.5)	31 (117)	28.6 (1.97)	

Notes:
1. For NFPA 13 installations the flow per sprinkler must be the greater of: (1) the flow listed in the table above or (2) the flow required to achieve a minimum design density of 0.1 gpm/sq ft over the design area of the sprinkler.
2. For coverage area dimensions less than those listed above, use the minimum required flow for the next larger max. coverage area listed.
3. Please note SIN difference between F1Res58 HSW (R3533) and F1Res58 HSWX (RA3533).

Model F1Res58 HSWX Horizontal Sidewall Sprinkler & Model F2 Recessed Escutcheon

SIN RA3533

Technical Specifications
- **Style:** Sidewall and Recessed Sidewall
- **Threads:** 1/2" NPT or ISO7-1R1/2
- **Nominal K-Factor:** 5.8 (84 metric)
- **Max. Working Pressure:** 175 psi (12 bar)

Material Specifications
- **Thermal Sensor:** 3 mm glass bulb
- **Sprinkler Frame:** Brass Alloy
- **Button:** Copper Alloy
- **Sealing Assembly:** Nickel Alloy with PTFE
- **Load Screw:** Bronze Alloy
- **Deflector:** Bronze Alloy

Finishes
(See Table N)

Sensitivity
Fast-response

Temperature Ratings
155°F (68°C)
175°F (79°C)

Recessed Escutcheons
F2 Recessed

Sprinkler Wrenches
Model W2
Model W4 (Recessed)

Model F1Res58 HSWX Residential Horizontal Sidewall Sprinkler Installation Dimensions

Figure 12

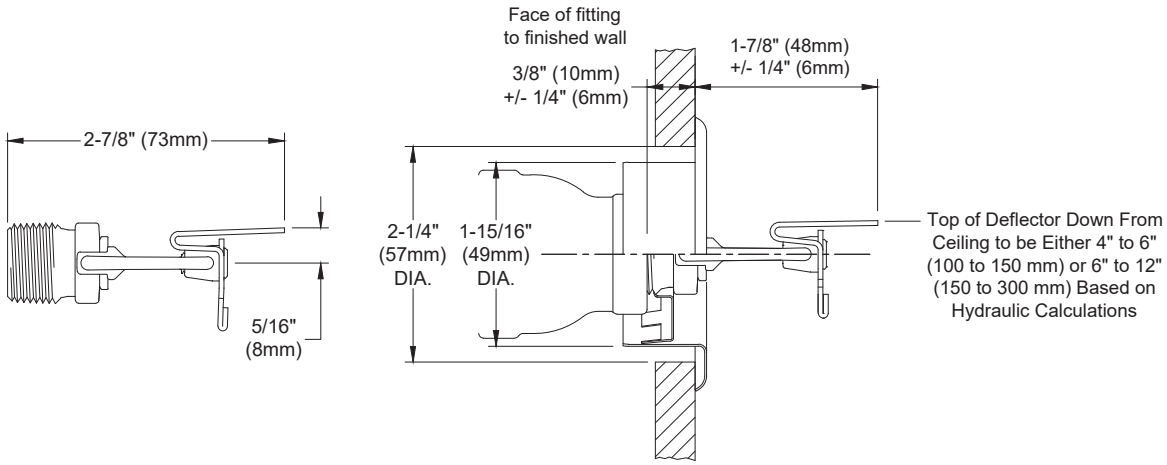

Dimensions

F2 Recessed Escutcheon Installation

Model F1Res58 HSWX Horizontal Sidewall Sprinkler Hydraulic Design Criteria

Table M

Minimum Flow and Residual Pressure in Wet Pipe Systems[1]			
Maximum Coverage Area[2] ft. x ft. (m x m)	**Flow gpm (l/min)**	**Pressure psi (bar)**	**Deflector to Ceiling Distance**
18 x 20 (5.5 x 6.1)	30 (114)	26.8 (1.85)	4 to 6 inches (100 to 150 mm)
20 x 20 (6.1 x 6.1)	30 (114)	26.8 (1.85)	
16 x 22 (4.9 x 6.7)	33 (125)	32.4 (2.23)	
16 x 24 (4.9 x 7.3)	38 (144)	42.9 (2.96)	
14 x 26 (4.3 x 7.9)	42 (160)	52.4 (3.63)	
18 x 20 (5.5 x 6.1)	35 (133)	36.4 (2.51)	6 to 12 inches (150 to 300 mm)
16 x 22 (4.9 x 6.7)	38 (144)	42.9 (2.96)	
16 x 24 (4.9 x 7.3)	42 (160)	52.4 (3.61)	
14 x 26 (4.3 x 7.9)	46 (174)	62.9 (4.34)	

Notes:
1. For NFPA 13 installations the flow per sprinkler must be the greater of: (1) the flow listed in the table above or (2) the flow required to achieve a minimum design density of 0.1 gpm/sq ft over the design area of the sprinkler.
2. For coverage area dimensions less than those listed above, use the minimum required flow for the next larger max. coverage area listed.
3. Please note SIN difference between F1Res58 HSW (R3533) and F1Res58 HSWX (RA3533).

Finishes **Table N**

Standard Finishes			Special Application Finishes		
Sprinkler(1)	**F1, F2. & FP(3), Escutcheons**	**CCP, SWC (Conical) Cover Plates (1)**	**Sprinkler (1)**	**F1, F2, & FP(3) Escutcheons**	**CCP, SWC (Conical) Cover Plates (1)**
Bronze	Brass	--	Bright Brass	Bright Brass	Bright Brass
Chrome Plated	Chrome Plated	Chrome Plated	Satin Chrome	Satin Chrome	Satin Chrome
White Polyester (2)	White Polyester	White Paint	Black Polyester (2)	Black Polyester	Black Paint
--	--	--	Custom Color Polyester	Custom Color Polyester	Custom Color Paint
--	--	--	Electroless Nickel PTFE (2)	--	--

Notes:
(1) Paint or any other coating applied over the factory finish will void all approvals and warranties.
(2) cULus Listed Corrosion Resistant.
(3) The Model FP escutcheon assembly consists of an unfinished galvanized cup with a finished escutcheon ring.

Installation

Models F1Res sprinklers are to be installed as shown in this bulletin. Model F1, F2, and FP recessed escutcheons are the only recessed escutcheons to be used with Model F1Res sprinklers. Not all F1Res sprinklers may be used with all recessed escutcheons offered. Confirm listing of escutcheon type for use with individual sprinklers. Use of any other recessed escutcheon will void all approvals and warranties.

For installing Model F1Res sprinklers, use only the Model W2 sprinkler Wrench; for installing Models F1Res Recessed Pendent, Sidewall, Conical Concealed Pendent (CCP), and Sidewall Concealed (SWC and SWC–2) sprinklers use only the Model W4 sprinkler wrench. Use of wrenches other than those specified may damage these sprinklers.

Installation of F1Res sprinklers in a wall or ceiling will require a hole diameter of 2-1/4" (57 mm) for F1 or F2 recessed escutcheons; or 2-5/8" (67 mm) for FP recessed escutcheons, CCP, SWC, and SWC–2 cover plates.

Install F1Res HSW sprinklers with a ceiling to deflector distance that complies with the hydraulic design criteria tables in this bulletin. The flow arrow on deflector must point away from near wall and "Top" marking must face the ceiling.

A 'leak tight" sprinkler joint can be obtained with the following torque:

- 1/2" NPT and ISO7-1R1/2: 8-18 ft-lbs (11 – 24 N-m)
- 3/4" NPT and ISO7-1R3/4: 14-20 ft-lbs (19 – 27 N-m)

Do not tighten sprinklers over maximum recommended torque. This may cause leakage or impairment of the sprinklers.
Do not install any glass bulb sprinklers where the bulb is cracked or there is a loss of liquid from the bulb.

Glass bulb sprinklers have orange bulb protectors to minimize bulb damage during shipping, handling and installation. Remove this protection at the time the sprinkler system is placed in service. Removal of the protectors before this time may leave the bulb vulnerable to damage. RASCO wrenches are designed to install sprinklers when protectors are in place. Remove protectors by undoing the clasp by hand. Do not use tools to remove the protectors.

Model W2

Model W4

Model W4 Wrench Installation Example **Figure 13**

The Model W4 wrench includes two sets of jaws. One set of jaws is equivalent to a Model GFR2 wrench and the other set of jaws is equivalent to a Model W1 wrench. Use the smallest of the two sets of jaws that will fit on the sprinkler's wrench flats. The Model W4 wrench is used in conjunction with the installer's nominal 1/2" square drive ratchet and nominal 5" (125mm) long extension (not provided) as shown in Figure 13.

Maintenance

Reliable Model F1Res Sprinklers should be inspected and the sprinkler system maintained in accordance with NFPA 25, 13, 13D, and 13R, as well as the requirements of any Authorities Having Jurisdiction.

Prior to installation, sprinklers should remain in the original cartons and packaging until used. This will minimize the potential for damage to sprinklers that could cause improper operation or non-operation.

Do not clean sprinklers with soap and water, ammonia liquid or any other cleaning fluids. Remove dust by gentle vacuuming without touching the sprinkler.

Replace any sprinkler which has been painted (other than factory applied). Properly installed CCP, SWC, and SWC–2 cover plates will have an air gap that is required for proper operation, do not seal the gap or paint the cover plates.

Replace any sprinkler which has been damaged, where cracks are observed in the glass bulb, or when liquid has been lost from the glass bulb.

A stock of spare sprinklers should be maintained to allow quick replacement of damaged or operated sprinklers.
Failure to properly maintain sprinklers may result in inadvertent operation or non-operation during a fire event.

Listings & Approvals

Listed by Underwriters Laboratories Inc. and UL Certified for Canada (cULus)

Guarantee

For Reliable Automatic Sprinkler Company guarantee, terms, and conditions, visit www.reliablesprinkler.com.

Patents

For patents applicable to products contained in this technical bulletin, please visit www.r-s.co

Ordering Information

Specify the following when ordering:

Sprinkler
- Model (See Table A)
- Temperature Rating
- Threads (NPT or ISO7-1)
- Finish (See Table N)

Escutcheon or Cover Plate
- Model
- Finish (See Table N)

Sprinkler Wrench
- Model W2 (Pendent and HSW)
- W4 (Recessed and Concealed)

Note: Please note SIN difference between F1Res58 HSW (R3533) and F1Res58 HSWX (RA3533).

P/N 9999970235