Bulletin 517 Rev. A

Reliable®

Model DDX-SS Deluge Valve 8” (200mm)

Instructions for Installation, Operation, Care and Maintenance

Wet Pilot Line, Dry Pilot Line, and Electric Actuation Trims

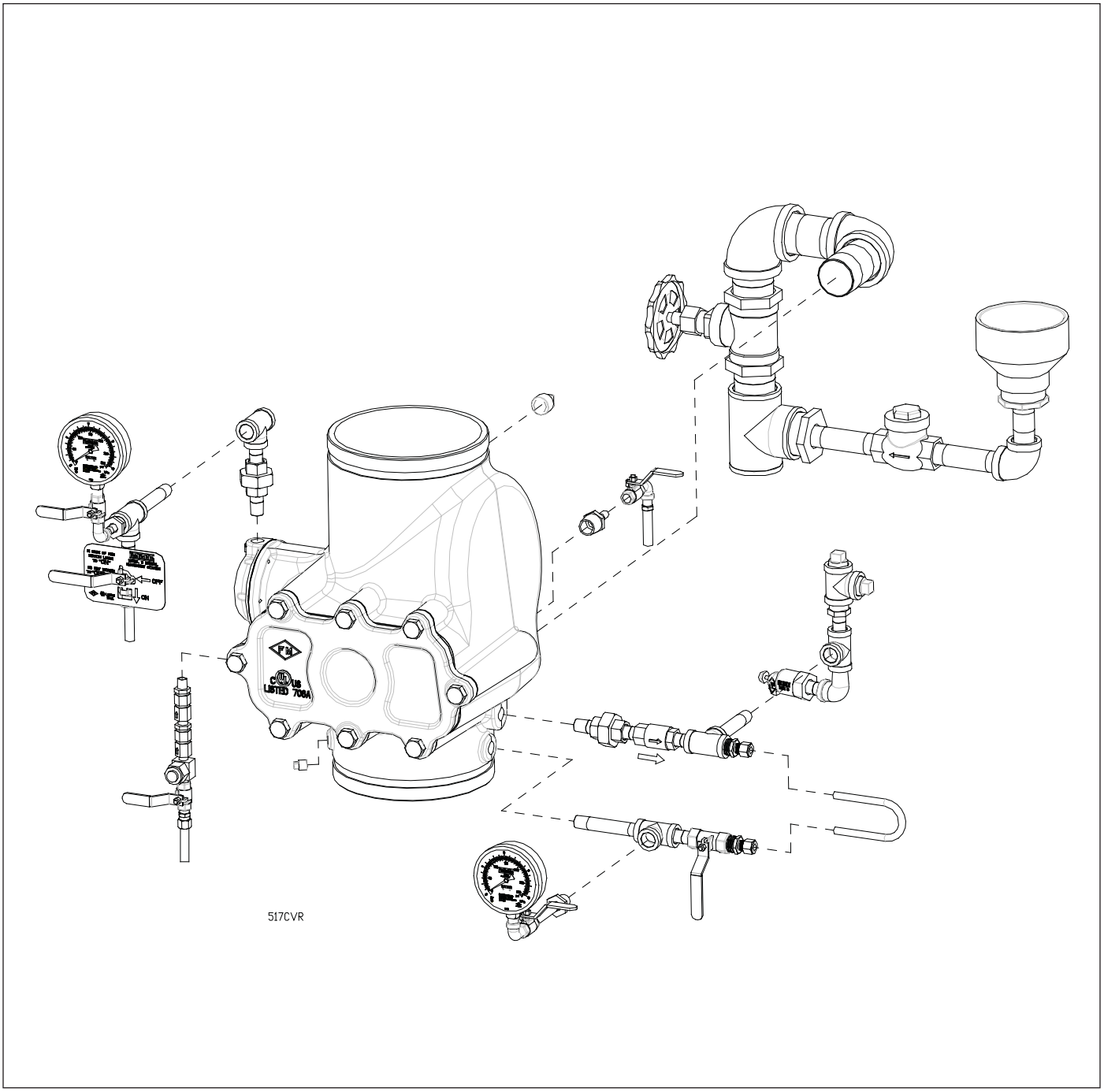

The Reliable Automatic Sprinkler Co., Inc., 103 Fairview Park Drive, Elmsford, New York 10523

General

The Reliable Model DDX-SS Deluge Valve is a hydraulically operated, differential latching clapper-type valve designed for use as primary control valve in deluge, preaction, or special types of fire protection systems. Following operation, the valve is easily reset externally (see Fig.1).

The Wet Pilot Line Trim set is connected to the push rod chamber outlet and provides a two inch main drain, alarm test, supply pressure gauge, and the push rod chamber supply connections. Releasing devices that can be used are wet pilot line detectors (Model F1-FTR) or hydraulic manual emergency stations/pull boxes (Models A or Model B).

Two alternate actuation trim sets, Dry Pilot Line or Electric Actuation, are available when dry pilot sprinklers or solenoid valves are used for releasing. Actuation by solenoid valves enables a full range of electrical detectors to be used for remote sensing.

Listings & Approvals:

(Only when used with Reliable's Trim Sets.)

1. Listed by Underwriters Laboratories, Inc. and UL certified for Canada (cULus).
2. Certified by Factory Mutual Approvals (FM).

Valve Operation

The Reliable Model DDX-SS Deluge Valve is shown in both closed and open positions in Fig. 1. In the closed position, the supply pressure acts on the underside of the clapper and also on the push rod through the push rod chamber's inlet restriction. The resultant force due to the supply pressure acting on the push rod is multiplied by the mechanical advantage of the lever and is more than sufficient to hold the clapper closed against normal supply pressure surges.

When a fire is detected, a releasing device vents the push rod chamber to atmosphere through the chamber's outlet. Since the pressure cannot be replenished through the inlet restriction as rapidly as it is vented, the push rod chamber pressure falls instantaneously. When the push rod chamber pressure approaches approximately one third of the supply pressure, the upward force of the supply pressure acting beneath the clapper overcomes the lever-applied force thereby opening the clapper.

Once the clapper has opened, the lever acts as a latch, preventing the clapper from returning to the closed position. Water from the supply flows through the Deluge Valve into the system piping. Water also flows through the Deluge Valve alarm outlet to the alarm devices.

After system shutdown, resetting the Model DDX-SS Deluge Valve is quite simple. Doing so only requires pushing in and turning the reset knob at the rear of the valve (see Fig.1). The external reset feature of the Model DDX-SS Deluge Valve provides a means for simple, economical system testing, which is one essential facet of a good maintenance program. The external reset feature does not, however, eliminate another important facet of good maintenance, namely, periodic cleaning and inspection of the internal valve parts.

In the event that water builds up inside the valve due to condensate from the air supply system or water left inside from valve system testing, a drain is available for venting. After closing the main supply valve, a small valve over the drain cup can be opened slightly until the water inside the valve body and the main pipe column has drained.

Whenever ambient temperature conditions are high, the water temperature in the Model DDX-SS Deluge Valve's pushrod chamber could possibly increase, thereby increasing the pressure in the chamber to values exceeding the rated pressure of the system. In an indoor installation where standard room temperatures are exceeded, a pressure relief kit may be needed. Pressure relief kit, P/N 6503050001, can be installed into the pushrod chamber's release line to limit the pressure to 175 psi (12,1 bar).

Reliable Model DDX-SS Deluge Valve with associated trim size 8" (200 mm) is rated for use at a minimum water supply pressure of 20 psi (1,4 bar) and a maximum water supply pressure of 250 psi (17,2 bar). Water supplied to the inlet of the valve and to the push rod chamber must be maintained between 40°F (4°C) and 140°F (60°C).

Pressurizing Line Connection

The water supply for the push-rod chamber must be provided by connection of its inlet pressurizing line to the water supply piping. Pressurizing lines for multiple Model DDX-SS Deluge Valve push-rod chambers must never be manifolded together, having only a single tap on the water supply piping. Each Model DDX-SS Deluge Valve must have its own push-rod chamber pressurizing line connection.

This connection must be made on the supply side of the water supply control valve (see Fig.3). This can be accomplished by:

- Using a tapped connection directly below or next to the main water supply control valve using a welded outlet or the appropriate mechanical fittings. A grooved-end outlet coupling is one way to achieve this; or
- Using a water supply control valve that has an available threaded (NPT) supply-side tap design to allow for a direct water supply connection to the Model DDX-SS Deluge Valve's push-rod chamber.

Caution: Reliable's DDX-SS valve is designed with an inlet restriction built into the pushrod chamber. It is important not to introduce additional restrictions into the direct water supply connection or the discharge from the pushrod chamber by installing additional valves or improperly installing the stainless steel lines used in the trim of the valve.

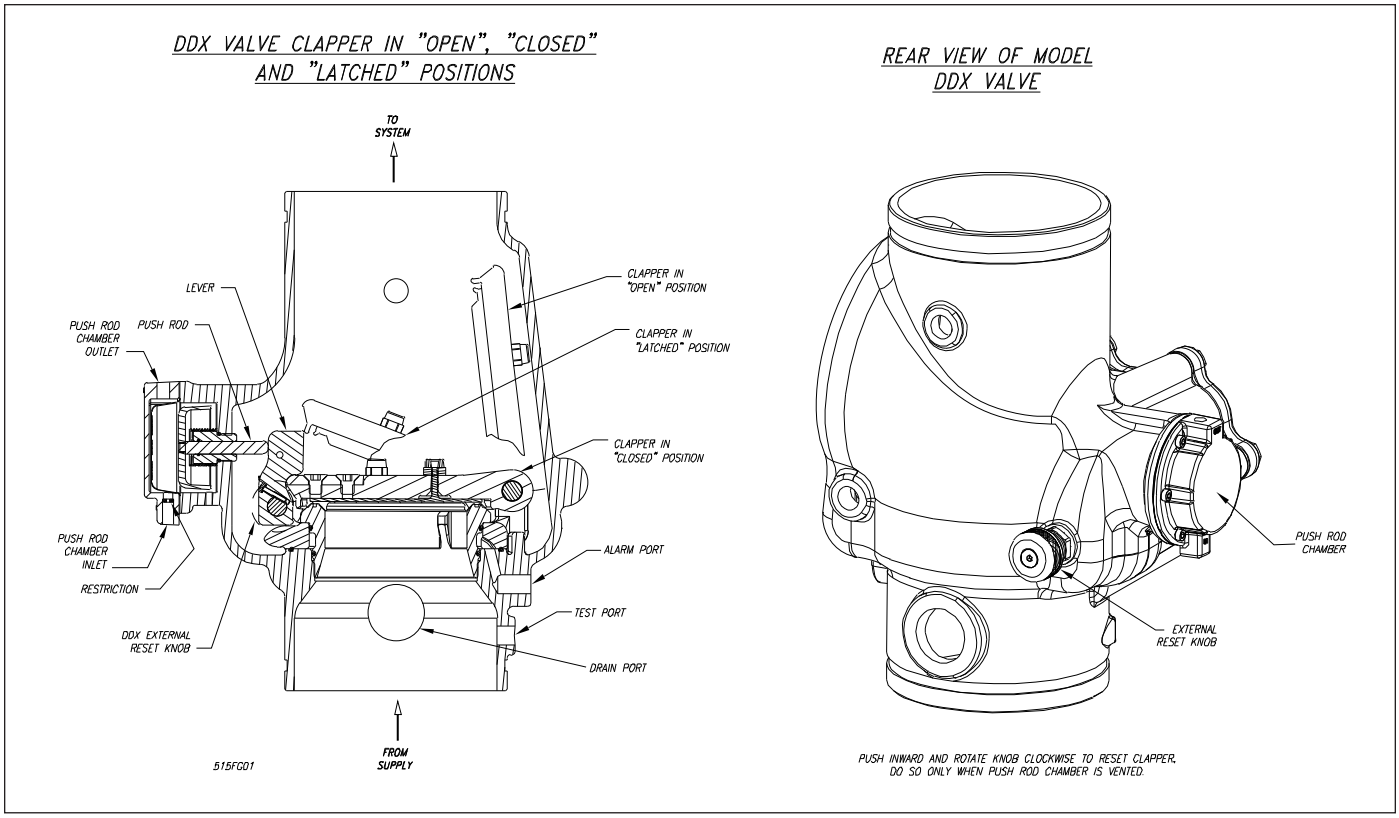

Fig. 1

Hydrostatic Testing of DDX-SS Valves and DDX-SS Systems

As required by NFPA 13, fire sprinkler systems with working pressures up to and including 150 psi are to be hydrostatically tested at a water pressure of 200 psi and maintain that pressure without loss for two hours. Fire sprinkler systems with working pressures above 150 psi are required to be hydrostatically tested at 50 psi above the system working pressure and maintain that pressure without loss for two hours. In addition to the hydrostatic tests described above, dry pipe and double interlock preaction systems require an additional low pressure air test.

In some cases, hydrostatic testing (in accordance with the NFPA 13 requirements noted above) will result in pressures that exceed the working pressure of the valve and trim kit for the two-hour test period. **The valve and applicable trim kit have been tested, approved and listed under these conditions and as such, hydrostatic testing in accordance with NFPA 13 is acceptable. In addition, the clapper can remain in the closed position and the trim kit need not be isolated, as each has been designed to withstand hydrostatic testing as required by NFPA 13.**

Hydrostatically testing the valve and trim to pressures higher than their rating is limited to the hydrostatic test as referenced by NFPA 13. It does not address the occurrence(s) of a "water hammer" effect, which can indeed damage the valve. A "water hammer" in the water supply piping of the valve can create pressures in excess of the rated pressure and should be avoided by all necessary means. This condition may be created from improper fire pump settings, underground construction work, or an improper venting of trapped air in the water supply piping.

Engineering Specification

8" (200 mm) Model DDX-SS Deluge Valve

Deluge valve shall be a [8" (200 mm] [cULus Listed][Factory Mutual Approved] hydraulically operated, differential latching clapper- type valve. Deluge valve construction shall be of lightweight, stainless steel construction with "screw in" stainless steel seat and clapper assembly. Stainless steel seat shall have O-ring seals to resist leakage and corrosion. Clapper facing shall be pressure actuated, providing a limited compression seat for the sealing force between the clapper rubber facing and the valve seat. Deluge valve shall have an external reset knob for resetting the clapper without requiring the removal of the valve face plate. Push-rod chamber design shall consist of a stainless steel piston/ push-rod and spring assembly with diaphragm seal secured to the casting through a push-rod guide constructed of a synthetic engineering plastic to resist corrosion. Casting shall have a bleeder hole located on the pushrod chamber for air/water leakage indication. Trip ratio shall be approximately a 3:1 force differential. Deluge valve shall be of the straight through design to minimize friction loss. Deluge valve shall be activated by [hydraulic wet-pilot][low pressure, pneumatic dry-pilot][electric] actuation trim. Inlet restriction orifice shall be factory machined into the inlet port of the deluge valve

push-rod cover plate and not be a separate part of the deluge valve trim. End connection style to be [8" (200mm] grooved inlet and grooved outlet, per ANSI/AWWA C606 or [8" (200mm)] flanged inlet and flanged outlet, class 150 or class 300, per ASME B16.5. Deluge valve shall have a rated working pressure of 250 psi (17,2 bar) and shall be factory hydrostatic tested at 500 psi (34,5 bar).

Deluge valve to be [8" (200 mm)] Reliable Model DDX-SS Deluge Valve (Bulletin 517).

Wet Pilot Line Trim

Deluge valve wet pilot line trim shall be stainless steel and include 2" main drain, alarm line test, water pressure gauges, pushrod chamber supply connections, manual emergency release valve, connection for wet pilot line of detectors, and 4" diameter drip cup assembly. Condensate drain trim shall also be included to prevent water columning above the clapper. The wet pilot line detection piping shall be ½" schedule 40 stainless steel pipe and extend from the deluge valve push-rod chamber outlet to the protected area. Maximum wet pilot line length and height shall be in accordance with manufacturer's guidelines. Wet pilot line shall utilize Reliable Model F-FTR fixed temperature release pilot line detectors spaced and positioned in accordance with the device listing or in accordance with NFPA 72 as fixed temperature heat detectors.

Dry Pilot Line Trim

Dry pilot line trim to be used in areas:

- Where ambient temperatures are expected to exceed 150 °F (65 °C)
- Subject to freezing
- Maximum wet pilot line height and/or length are exceeded

Deluge valve dry pilot line trim shall be stainless steel and include Model LP-SS Dry Pilot Line Actuator, 2" main drain, alarm line test, air and water pressure gauges, push-rod chamber supply connections, manual emergency release valve, pressure relief valve, low air pressure switch, connections for dry pilot line of detectors and 4" diameter drip cup assembly. Condensate drain trim shall also be included to prevent water from columning above the clapper. Dry pilot line detection piping shall be ½" schedule 40 stainless steel pipe and extend from the deluge valve push-rod chamber outlet to the protected area. Dry pilot line shall utilize Reliable Model F-FTR fixed temperature release pilot line detectors spaced and positioned in accordance with the device listing or in accordance with NFPA 72 as fixed temperature heat detectors.

Electric Actuation Trim

Deluge valve electric trim shall be stainless steel and include a normally closed, powered open electric solenoid valve, 2" main drain, alarm line test, water pressure gauges, push-rod chamber supply connections, manual emergency release valve, and 4" diameter drip cup assembly. Condensate drain trim shall also be included to prevent water from columning above the clapper.

Solenoid Valve Specifications:

Valcor Model SV350GF16V1DF5-AF34
Rated working pressure: 250 psi (17,2 bar)
Voltage: 24 VDC
Power: 14 Watts
Current: 0.58 Amps Holding
Enclosure Coil: NEMA 4/4X
Pipe Size: ½" NPT Female
Cv Factor: 1.5

Model DDX-SS Deluge Valve Description

1. Rated working pressure:
   Valve & System - 250 psi (17.2 bar).
2. Factory tested to a hydrostatic pressure of 500 psi (34,5 bar). (Valve only)
3. End and trim connections:
   - ANSI/AWWA C606 grooved inlet and outlet

Groove Dimension			
Outlet Diameter	Groove Diameter	Groove Width	Outlet Face to Groove
8.625" (219mm)	8.441" (214mm)	7/16" (11mm)	3/4" (19mm)

   - ASME B16.5 Flanged inlet and outlet

Flange Dimensions					Recommended Bolt Length	
Class Rating	Bolt Circle	Bolt Hole Diameter	Number of Bolts	Bolt Diameter	Machine Bolt	Stud Bolt
150	11.75" (298mm)	7/8" (22.2mm)	8	3/4" (19.1mm)	4" (101.6mm)	4.75" (120.7mm)
300	13" (330mm)	1" (25.4mm)	12	7/8" (22.2mm)	4.75" (120.7mm)	5.50" (139.7mm)

Note: Due to thickness of flange, the Class 150 bolt length is 1/2" (12.7 mm) longer than normally recommended per ASME B16.5

   - Threaded openings Per ANSI B 2.1
4. Valve Exterior's Color: Natural
5. Face to face dimensions:
   - 19³/₈" (492 mm) Groove/Groove
   - 21¼" (540 mm) Flange/Flange
6. Shipping weight:
   - 159 lbs (72.1 kg) with groove/groove ends
   - 259 lbs (kg) with flange/flange ends
7. Friction loss (Expressed in equivalent length of Schedule 40 pipe, based on Hazen & Williams formula with C=120
   - 53.5 ft (16.31 m)
8. Installation position: Vertical

Trim Descriptions

The trims for the Reliable Model DDX-SS Deluge Valve are arranged for rapid, easy, and compact attachment, and serve as connection points to Reliable Model C Mechanical Alarms and other devices.

The available Model DDX-SS Deluge Valve trim sets are:

- Wet Pilot Trim
- Dry Pilot Trim
- Electric Actuation Trim

All three trim configurations can be ordered as individual parts, in time-saving segmentally assembled kit forms, or fully assembled to the Model DDX-SS Deluge Valve (with or without a control valve).

The Model B Hydraulic Manual Emergency Station (see Fig. 7) is a standard item of all Deluge Valve trim sets. It consists of a stainless steel nameplate mechanically attached to a ball valve. The valve handle in its OFF position is guarded against accidental turning to the ON position (and system discharge) by a nylon cable tie provided with each trim kit. The cable tie is inserted, as shown in Fig. 7, after the system has been restored for operation. The nylon cable tie is designed to allow, in case of an emergency, forceful turning of the valve handle to the ON position. As an alternative to the Model B Hydraulic Manual Emergency Station, the Model A Hydraulic Manual Emergency Pull Box (see Bulletin 506) is also available and can be provided as an option.

Model F1-FTR fixed temperature pilot line detectors and spacing requirements are described in Bulletin 180.

Wet Pilot Line Trim

Wet pilot line operation is the simplest method of Deluge Valve Actuation. Shown in Fig.3, it contains components required on all installations, such as two inch main drain, alarm test, supply and push rod chamber pressure gauges, and push rod chamber connections.

The wet pilot line consists of a line of closed detectors (Model F1-FTR) located over the area to be protected. This line contains water under pressure and is connected to the outlet of the push rod chamber of the Deluge Valve. When one of the pilot line detectors actuates, the push rod chamber is vented and the Deluge Valve operates. The Deluge Valve can also be operated manually by opening the ball valve of the Model B Hydraulic Manual Emergency Station (see Fig. 7) or the optional Model A Hydraulic Manual Emergency Pull Box (see Reliable Bulletin 506).

The wet pilot line is only a detection system and does not contribute to controlling the fire. Its installation is subject to the following restrictions:

a) It is not to be installed in an area subject to freezing.
b) It is not to be installed in an area where temperatures in excess of 150°F (65°C) are anticipated.
c) NFPA 72 or the authority having jurisdiction should be consulted for spacing and elevation requirements.
d) Maximum wet pilot line length and height must comply with data provided in Fig. 2.

Wet Pilot Trim installation on Model DDX-SS Deluge Valves uses eight tapped openings for trim connections. Each opening and its function are indicated on Fig. 3. Using Fig. 3 as reference, the recommended trim installation is as follows:

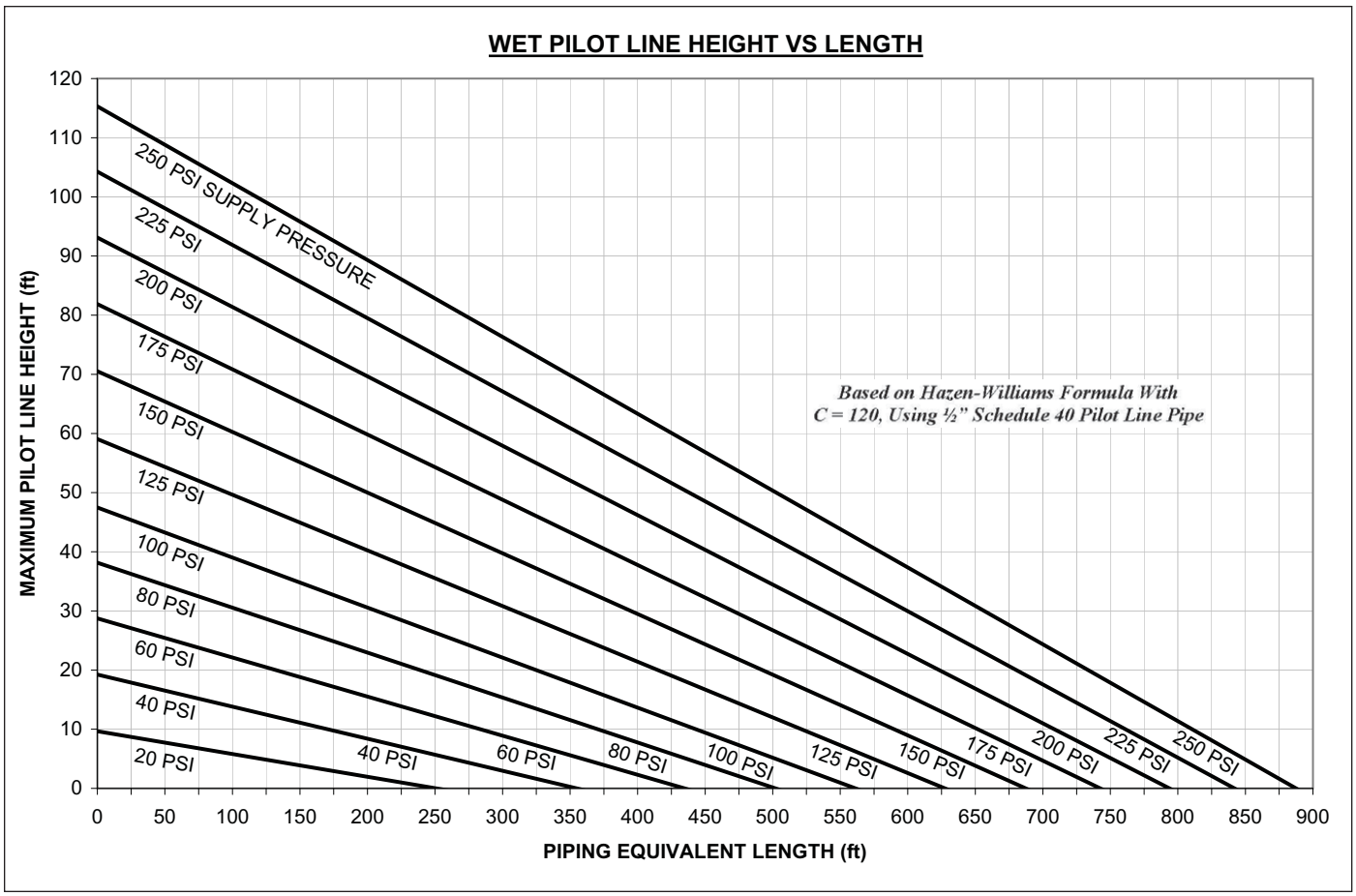

Fig. 2

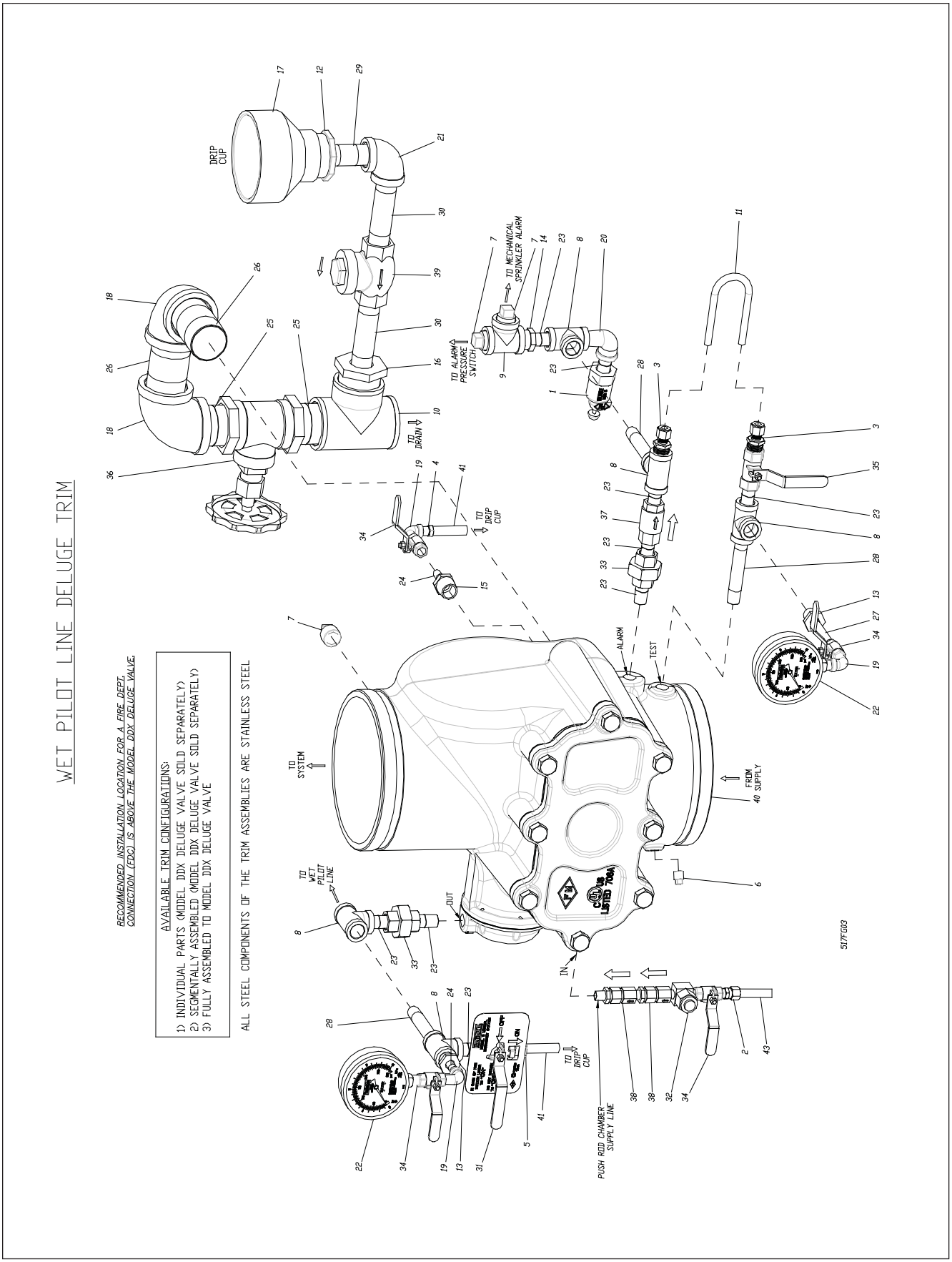

Fig. 3

Note: Use ONLY Reliable Model DDX Stainless Steel trim with the Reliable Model DDX-SS Deluge Valve

Model DDX-SS 8” (200mm) Deluge Valve Wet Pilot Trim Parts List (Refer to Fig. 3)

ITEM NO.	PART NO.	DESCRIPTION	QTY.
1	78653100	Valve, Ball Drip, 1/2”	1
2	92056730	Connector, 3/8” Tubing X 1/4” NPT, S.S.	1
3	92056731	Fitting, Compression, 1/2” NPT, 3/8” Tubing, S.S.	2
4	92056810	Connector, 3/8” ID Tube X 1/4” NPT, S.S.	1
5	92056810	Connector, 3/8” ID Tube X 1/2” NPT, S.S.	1
6	95200201	Plug, S.S., Sq. Hd., 1/4”	1
7	95200202	Plug, S.s., Sq. Hd., 3/4”	3
8	96606300	Tee, Brass, 1/2” X 1/2” X 1/2”	5
9	96606303	Tee, Brass, 3/4” X 3/4” X 3/4”	1
10	96606304	Tee, Brass, 2” X 2” X 2”	1
11	96686803	Tube, 3/8”, Formed, Stainless Steel	1
12	98048015	Bushing, Reducer, 2” Spigot X 1” NPT, PVC	1
13	98048050	Bushing, Reducer, 1/2” To 1/4”	2
14	98048051	Bushing, Reducer, 3/4” To 1/2”	1
15	98048052	Bushing, Reducer, 3/4” To 1/4”	1
16	98048053	Bushing, Reducer, 2” To 1”	1
17	98050004	Drain Cup, PVC	1
18	98174432	Ell, 2”, Stainless Steel	2
19	98174434	Elbow, Street, 1/4” Npt, S.S.	3
20	98174434	Elbow, Street, 1/2” Npt, S.S.	1
21	98174436	Ell, 1”, Stainless Steel	1
22	98248008	Gauge, Water Pressure (0-300 PSI), S.S.	2
23	98543501	Nipple, 1/2” X 1-1/2”, S.S.	9
24	98543505	Nipple, 1/4” X 1-1/2”, S.S.	2
25	98543508	Nipple, 2” X Close, S.S.	2
26	98543509	Nipple, 2” X 3-1/2”, S.S.	2
27	98543510	Nipple, 1/4” X 3-1/2”, S.S.	1
28	98543511	Nipple, 1/2” X 4”, S.S.	3
29	98543512	Nipple, 1” X 3”, S.S.	1
30	98543513	Nipple, 1” X 4-1/2”, S.S.	2

ITEM NO.	PART NO.	DESCRIPTION	QTY.
31	98653006	Manual Release Station, S.S.	1
32	98727612	Strainer, In-line, 1/4” NPT, Male/Male	1
33	98815231	Union, 1/2”, Stainless Steel	2
34	98840118	Valve, Ball, 1/4”, S.S.	4
35	98840119	Valve, Ball, 1/2”, S.S.	1
36	98840174	Valve, Globe, 2”, S.S.	1
37	98840198	Valve, Check, In-line, 1/2”, S.S. Female/ Female	1
38	98840199	Valve, Check, In-line, 1/4”, Female/Male, S.S.	2
39	98840203	Valve, Check, In-line, 1”, S.S., Female/Female	1
40	6103080002	Assembly, Deluge Dry Valve, S.S.	1
41	96686756	Tube, Pvc, 3/8” X 6 Ft	1
42	96686804	Tube, Stainless Steel, 2 Ft	1

1. Install ½" nipple (#28) in the tapped opening marked "TEST" and connect the balance of the trim. **Note:** If interference with the main valve controlling water supply occurs, the gauge, street ell, ball valve and 1/4" NPT x 3½" nipple in the tapped opening marked "TEST" can be swapped for the 1/4" NPT plug in the tapped opening marked "SUPPLY" port.
2. Install ½" nipple (#23) in the tapped opening marked "ALARM" and connect balance of this trim line.
3. Install ¼" plug (#6) in the tapped opening marked "SUPPLY." **Note:** If interference with the main valve controlling water supply occurs, the gauge, street ell, ball valve and 1/4" NPT x 3½" nipple in the tapped opening marked "TEST" can be swapped for the 1/4" NPT plug in the tapped opening marked "SUPPLY" port.
4. Install ½" nipple (#23) in the tapped opening marked "OUT" and connect balance of this trim line.
5. Install ¼" female x male check valve (#38) in the tapped opening marked "IN" and connect balance of this trim line. **Caution:** Over tightening check valve can cause a restriction in flow that may prevent the valve from "setting up".
6. Install 2" nipple (#26) in the tapped drain opening and connect balance of this trim line.
7. Install ¾ x ¼ reducing coupling (#15) in the lowermost tapped opening at the rear of the Deluge Valve and connect the balance of this trim line.
8. Install ¾" pipe plug (#7) in the upper-most tapped opening at the rear of the Deluge Valve.

Dry Pilot Line Trim

Dry pilot line operation is used in areas which are subject to freezing conditions or to obtain installed sprinkler heights and pipe lengths greater than allowed for wet pilot line trim. Dry pilot operation uses a pilot line of closed sprinklers (Model F1-FTR) containing air under pressure located in the area to be protected. This pressurized line is connected to a Model LP-SS Dry Pilot Line Actuator. The dry pilot line actuator functions very much like a miniature dry pipe valve. In areas where moisture-laden air could cause freezing or other problems in the dry pilot line, the use of a cylinder of dry compressed gas such as nitrogen is suggested. Approved gas handling regulators and connections are then recommended. When one of the closed sprinklers on the dry pilot line actuates, the air pressure is reduced, thus opening the Model LP-SS Dry Pilot Line Actuator, which releases the Deluge Valve. NFPA 72 or the Authority Having Jurisdiction should be consulted for spacing and elevation requirements of the pilot line sprinklers. The Dry Pilot Line Trim, shown in Fig. 5, includes gauges to read the air and water pressure, a low air pressure switch, a pressure relief valve, a Model LP-SS Dry Pilot Line Actuator, and connections for the dry pilot line of detectors. Dry Pilot Line Trim installation on Model DDX-SS Deluge Valves uses eight tapped openings for trim connections. Each opening and its function are indicated on Fig. 5. Using Fig. 5 as reference, the recommended trim installation is as follows:

1. Install ½" nipple (#31) in tapped opening marked "TEST" and connect the balance of the trim. **Note:** If interference with the main valve controlling water supply occurs, the gauge, street ell, ball valve and 1/4" NPT x 3½" nipple in the tapped opening marked "TEST" can be swapped for the 1/4" NPT plug in the tapped opening marked "SUPPLY" port.
2. Install ½" nipple (#26) in tapped opening marked "ALARM" and connect balance of this trim line.
3. Install ¼" plug (#8) in tapped opening marked "SUPPLY." **Note:** If interference with the main valve controlling water supply occurs, the gauge, street ell, ball valve and 1/4" NPT x 3½" nipple in the tapped opening marked "TEST" can be swapped for the 1/4" NPT plug in the tapped opening marked "SUPPLY" port.
4. Install ½" nipple (#26) in tapped opening marked "OUT" and connect balance of this trim line.
5. Install ¼" female x male check valve (#42) in tapped opening marked "IN" and connect balance of this trim line. **Caution:** Over tightening check valve can cause a restriction in flow that may prevent the valve from "setting up".
6. Install 2" nipple (#29) in tapped drain opening and connect balance of this trim line.
7. Install ¾" x ¼" reducing bushing (#17 in the lowermost tapped opening at the rear of the Deluge Valve and connect the balance of this trim line.
8. Install ¾" pipe plug (#9) in the upper-most tapped opening at the rear of the Deluge Valve.

Connect the air supply to the air inlet side of the Model LP-SS Dry Pilot Line Actuator as shown in Fig. 5. Table A specifies the air pressure to be used in a dry pilot line. The level of air pressure should be maintained by an air maintenance device such as the Reliable Model A2 Air Maintenance Device and set as required by Table A. A pressure relief valve is supplied with the trim kit and is factory set to 35 psi. (2.4 bar). An appropriate automatic pressure maintenance device must be used to safeguard against the Deluge Valve tripping due to air pressure leaks in the dry pilot line. See Bulletins 250 and 251 for pressure maintenance device information.

Install the dry pilot line as required. Wire the low air pressure switch (#1, Fig. 5) to an annunciating device or control panel. This low air pressure switch should be set to open at an air pressure which is slightly lower than the "Not Less Than" values found in Table A.

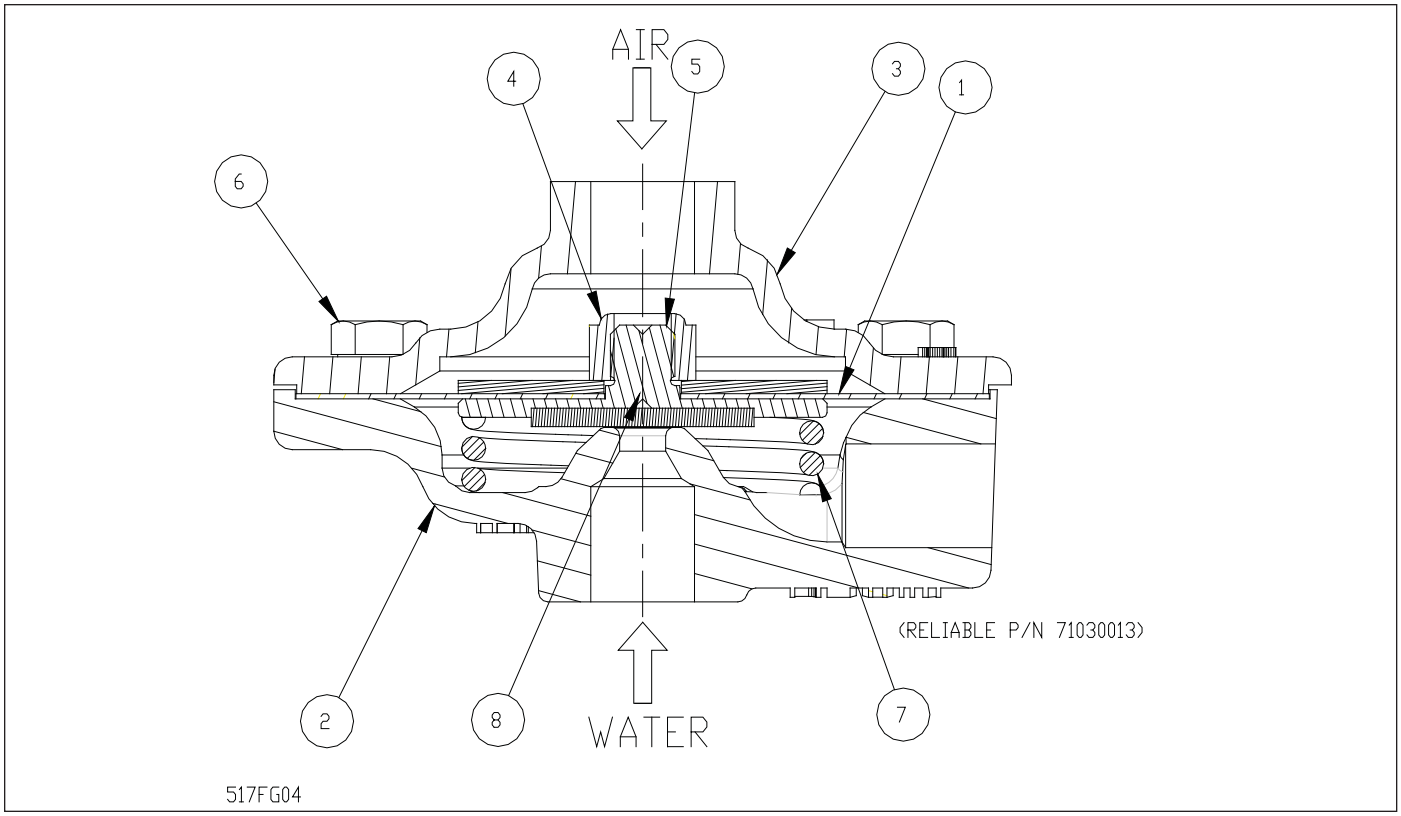

Fig. 4

Table A

Water Pressure psi (bar)		Pneumatic Pressure to be Pumped into Sprinkler System psi (bar)			
Maximum		Not Les Than		Not More Than	
20	(1.4)	10	(.7)	14	(1.)
50	(3.4)	12	(.8)	16	(1.1)
75	(5.2)	13	(.9)	17	(1.2)
100	(6.9)	15	(1.)	19	(1.3)
125	(8.6)	16	(1.1)	20	(1.4)
150	(10.3)	17	(1.2)	21	(1.4)
175	(12.1)	18	(1.2)	22	(1.5)
200	(13.8)	19	(1.3)	23	(1.6)
225	(15.5)	21	(1.4)	25	(1.7)
250	(17.2)	22	(1.5)	26	(1.8)

Maintenance – Model LP-SS Dry Pilot Line Actuator

Refer to Figs. 4 and 9

If water constantly flows through the Model LP-SS Dry Pilot Line Actuator and into the drain, there is a leak in the seal of the Actuator's seat.

1. Close the main valve controlling water supply (Fig. 9) to the Dry Pipe Valve and close off the air/nitrogen supply to the sprinkler system. Close valve A (Fig. 9).
2. Drop pressure in the system by removing the air pressure gauge (#24, Fig. 5) and opening the 1/4" ball valve (#38, Fig. 5). Then remove the Actuator from the system.
3. Remove all six bolts (#6, Fig. 4) holding the Actuator together. Clean or replace the facing plate assembly (#5, Fig. 4) and clean the seat surface of the upper housing (#2, Fig. 4).
4. Reassemble the Actuator, using a torque of 8 ft-lbs on the facing plate nut (#4, Fig. 4) and 12 ft-lbs on the six bolts (#6, Fig. 4). Use a cross-tightening pattern. Reinstall the Actuator. Set up the Model DDX-SS Deluge Valve as per the section "Resetting Model DDX-SS Deluge Valve System."

Model LP Dry Pilot Line Actuator Parts list P/N 71030013

ITEM NO.	PART NO.	DESCRIPTION	QTY.
1	92206311	Diaphragm	1
2	94126937	Housing, Upper, S.S. Machining	1
3	94126938	Housing, Lower, S.S. Machining	1
4	94906406	Nut, Facing Plate	1
5	95106912	Assembly, Faceplate	1
6	95606406	Screw, Hex Cap, 3/8-16 X 5/8", 18-8 SS	6
7	96406902	Spring, Compression	1
8	96906311	Washer, Diaphragm	1

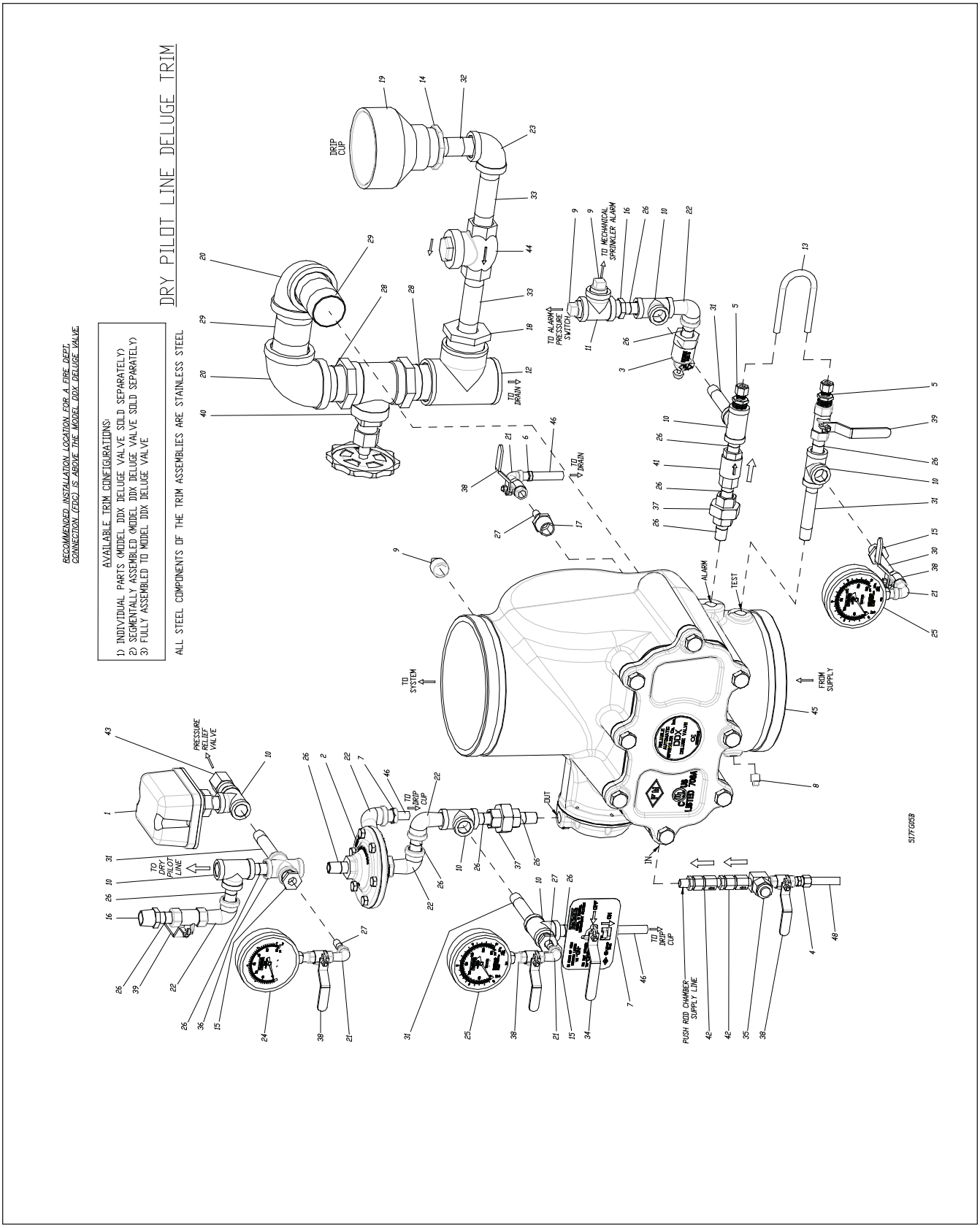

Fig. 5

Note: Use ONLY Reliable Model DDX Stainless Steel trim with the Reliable Model DDX-SS Deluge Valve

Model DDX-SS 8” (200mm) Dry Pilot Trim Parts List (Refer to Fig. 5)

ITEM NO.	PART NO.	DESCRIPTION	QTY.
1	6999992361	Switch, Pressure (EPS40-2) ULC	1
	6999991340	Switch, Pressure (EPS40-2) UL/FM	
2	71030013	Actuator, S.S.	1
3	78653100	Valve, Ball Drip, 1/2”	1
4	92056730	Connector, 3/8” Tubing X 1/4” NPT, S.S.	1
5	92056731	Fitting, Compression, 1/2” NPT, 3/8” Tubing, S.S.	2
6	92056810	Connector, 3/8” ID Tube X 1/4” NPT, S.S.	1
7	92056810	Connector, 3/8” ID Tube X 1/2” NPT, S.S.	2
8	95200201	Plug, S.S., Sq. Hd., 1/4”	1
9	95200202	Plug, S.S., Sq. Hd., 3/4”	3
10	96606300	Tee, Brass, 1/2” X 1/2” X 1/2”	7
11	96606303	Tee, Brass, 3/4” X 3/4” X 3/4”	1
12	96606304	Tee, Brass, 2” X 2” X 2”	1
13	96686803	Tube, 3/8”, Formed, Stainless Steel	1
14	98048015	Bushing, Reducer, 2” Spigot X 1” NPTF, PVC	1
15	98048050	Bushing, Reducer, 1/2” To 1/4”	3
16	98048051	Bushing, Reducer, 3/4” To 1/2”	2
17	98048052	Bushing, Reducer, 3/4” To 1/4”	1
18	98048053	Bushing, Reducer, 2” To 1”	1
19	98050004	Drain Cup, PVC	1
20	98174432	Ell, 2”, Stainless Steel	2
21	98174434	Elbow, Street, 1/4” Npt, S.S.	4
22	98174434	Elbow, Street, 1/2” Npt, S.S.	5
23	98174436	Ell, 1”, Stainless Steel	1
24	98248007	Gauge, Air Pressure (0-60 Psi), S.S.	1
25	98248008	Gauge, Water Pressure (0-300 Psi), S.S.	2

ITEM NO.	PART NO.	DESCRIPTION	QTY.
26	98543501	Nipple, 1/2” X 1-1/2”, S.S.	14
27	98543505	Nipple, 1/4” X 1-1/2”, S.S.	3
28	98543508	Nipple, 2” X Close, S.S.	2
29	98543509	Nipple, 2” X 3-1/2”, S.S.	2
30	98543510	Nipple, 1/4” X 3-1/2”, S.S.	1
31	98543511	Nipple, 1/2” X 4”, S.S.	4
32	98543512	Nipple, 1” X 3”, S.S.	1
33	98543513	Nipple, 1” X 4-1/2”, S.S.	2
34	98653006	Manual Release Station, S.S.	1
35	98727612	Strainer, In-line, 1/4” NPT, Male/Male	1
36	98750006	Pipe Cross, 1/2”, S.S.	1
37	98815231	Union, 1/2”, Stainless Steel	2
38	98840118	Valve, Ball, 1/4”, S.S.	5
39	98840119	Valve, Ball, 1/2”, S.S.	2
40	98840174	Valve, Globe, 2”, S.S.	1
41	98840198	Valve, Check, In-line, 1/2”, S.S. Female/Female	1
42	98840199	Valve, Check, In-line, 1/4”, Female/Male, S.S.	2
43	98840200	Valve, Pressure Relief, 1/2”, S.S.	1
44	98840203	Valve, Check, In-line, 1”, S.S., Female/Female	1
45	6103080002	Assembly, Deluge Dry Valve, S.S.	1
46	96686756	Tube, Pvc, 3/8” X 6 Ft.	1
47	96686803	Tube, Stainless Steel, 3/8” X 2 Ft	1

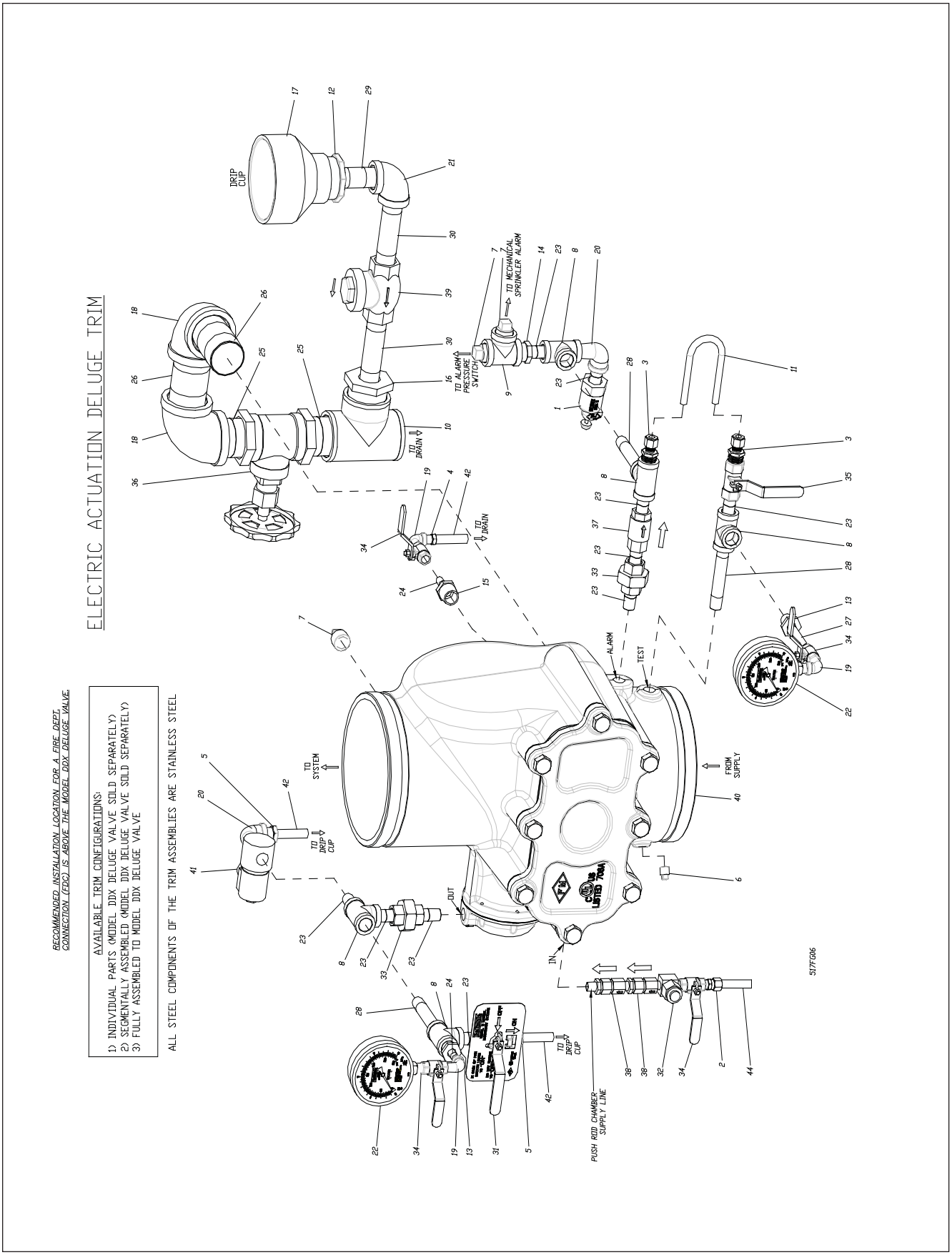

Fig. 6

Note: Use ONLY Reliable Model DDX Stainless Steel trim with the Reliable Model DDX-SS Deluge Valve

Model DDX-SS 8” (200mm) Electric Actuation Trim Parts List (Refer to Fig. 6)

ITEM NO.	PART NO.	DESCRIPTION	QTY.
1	78653100	Valve, Ball Drip, 1/2”	1
2	92056730	Connector, 3/8” Tubing X 1/4” NPT, S.S.	1
3	92056731	Fitting, Compression, 1/2” NPT, 3/8” Tubing, S.S.	2
4	92056810	Connector, 3/8” ID Tube X 1/4” NPT, S.S.	1
5	92056810	Connector, 3/8” ID Tube X 1/2” NPT, S.S.	2
6	95200201	Plug, S.S., Sq. Hd., 1/4”	1
7	95200202	Plug, S.S., Sq. Hd., 3/4”	3
8	96606300	Tee, Brass, 1/2” X 1/2” X 1/2”	5
9	96606303	Tee, Brass, 3/4” X 3/4” X 3/4”	1
10	96606304	Tee, Brass, 2” X 2” X 2”	1
11	96686803	Tube, 3/8”, Formed, Stainless Steel	1
12	98048015	Bushing, Reducer, 2” Spigot X 1” NPTF, PVC	1
13	98048050	Bushing, Reducer, 1/2” To 1/4”	2
14	98048051	Bushing, Reducer, 3/4” To 1/2”	1
15	98048052	Bushing, Reducer, 3/4” To 1/4”	1
16	98048053	Bushing, Reducer, 2” To 1”	1
17	98050004	Drain Cup, PVC	1
18	98174432	Ell, 2”, Stainless Steel	2
19	98174434	Elbow, Street, 1/4” NPT, S.S.	3
20	98174434	Elbow, Street, 1/2” Npt, S.S.	2
21	98174436	Ell, 1”, Stainless Steel	1
22	98248008	Gauge, Water Pressure (0-300 PSI), S.S.	2
23	98543501	Nipple, 1/2” X 1-1/2”, S.S.	10
24	98543505	Nipple, 1/4” X 1-1/2”, S.S.	2
25	98543508	Nipple, 2” X Close, S.S.	2
26	98543509	Nipple, 2” X 3-1/2”, S.S.	2
27	98543510	Nipple, 1/4” X 3-1/2”, S.S.	1
28	98543511	Nipple, 1/2” X 4”, S.S.	3
29	98543512	Nipple, 1” X 3”, S.S.	1
30	98543513	Nipple, 1” X 4-1/2”, S.S.	2

ITEM NO.	PART NO.	DESCRIPTION	QTY.
31	98653006	Manual Release Station, S.S.	1
32	98727612	Strainer, In-line, 1/4” NPT, Male/Male	1
33	98815231	Union, 1/2”, Stainless Steel	2
34	98840118	Valve, Ball, 1/4”, S.S.	4
35	98840119	Valve, Ball, 1/2”, S.S.	1
36	98840174	Valve, Globe, 2”, S.S.	1
37	98840198	Valve, Check, In-line, 1/2”, S.S. Female/Female	1
38	98840199	Valve, Check, In-line, 1/4”, Female/male, S.S.	2
39	98840203	Valve, Check, In-line, 1”, S.S., Female/Female	1
40	6103080002	Assembly, Deluge Dry Valve, S.S.	1
41	6871020021	Solenoid Valve, S.S.	1
42	96686756	Tubing, PVC, 3/8” I.D. X 6 Ft.	1
43	96686804	Tubing, Stainless Steel, 2 Ft.	1

Electric Actuation Trim

Electric Actuation trim (see Fig. 6) combines a normally closed/powered-open solenoid valve with the Wet Pilot Trim for releasing the Deluge Valve. The solenoid valve used in the assembly has a 250 psi (17,2 bar) rating. Details on the electrical portion of this trim can be found in Reliable Bulletin 700, which describes Deluge and Preaction Systems. Caution: Repairs or disassembly of the solenoid valve should only be done by a trained technician. An improperly repaired or partially assembled solenoid valve could result in failure of the valve to operate. Electric Actuation Trim installation on Model DDX-SS Deluge Valves uses eight tapped openings for trim connections. Each opening and its function are indicated on Fig. 6. Using Fig. 6 as reference, the recommended trim installation is as follows:

1. Install ½" nipple (#28) in tapped opening marked "TEST" and connect the balance of the trim. **Note:** If interference with the main valve controlling water supply occurs, the gauge, street ell, ball valve and 1/4" NPT x 3½" nipple in the tapped opening marked "TEST" can be swapped for the 1/4" NPT plug in the tapped opening marked "SUPPLY" port.
2. Install ½" nipple (#23) in tapped opening marked "ALARM" and connect balance of this trim line.
3. Install ¼" plug (#6) in tapped opening marked "SUPPLY." **Note:** If interference with the main valve controlling water supply occurs, the gauge, street ell, ball valve and 1/4" NPT x 3½" nipple in the tapped opening marked "TEST" can be swapped for the 1/4" NPT plug in the tapped opening marked "SUPPLY" port.
4. Install ½" nipple (#23) in tapped opening marked "OUT" and connect balance of this trim line.
5. Install ¼" female x male check valve (#38) in tapped opening marked "IN" and connect balance of this trim line. Supply line must be connected to the inlet of the control valve for each Deluge Valve as shown. **Caution:** Over tightening check valve can cause a restriction in flow that may prevent the valve from "setting up".
6. Install 2" nipple (#26) in tapped drain opening and connect balance of this trim line.
7. Install ¾" x ¼" reducing bushing (#15) in the lowermost tapped opening at the rear of the Deluge Valve and connect the balance of this trim line.
8. Install ¾" pipe plug (#7) in the upper-most tapped opening at the rear of the Deluge Valve

Resetting Model DDX-SS Deluge Valve Systems

Refer to Figs. 5, 8, & 9.

1. Close the valve controlling water supply to the Deluge Valve and close valve A (Fig. 9).
2. Open main drain valve B (Fig. 9) and drain system.
3. Open all drain valves and vents at low points throughout the system, closing them when flow of water has stopped. Open valve D (Fig. 9).
4. Push in the plunger of ball drip valve E (Fig. 9), forcing the ball from its seat to verify that there is atmospheric pressure inside the main valve chamber.
5. Push in and rotate external reset knob (#14, Fig. 8) clockwise, until you hear a distinct noise indicating that the clapper has reset.
6. Inspect and replace any portion of the detection system subjected to fire conditions.
7. Open valve A (Fig. 9) and allow water to fill the push rod chamber. Close valve D (Fig. 9).
8. Bleed all air from the actuation piping.
   - Wet Pilot Trim—bleed the entire wet pilot line until all air is removed at the most remote sprinkler.
   - Electric Actuation Trim—open the solenoid valve by operating a detector or an electric manual emergency station. While water is flowing through the solenoid valve, cause it to close. Refer to Bulletin 700, "Special Hazards & Special Systems" for details.
   - Dry Pilot Trim—open valve D (Fig. 9) allowing water to flow through the pilot line actuator. When all air has been expelled from the release line, and there is a solid flow of water into the drain cup J (Fig. 9), apply compressed air or nitrogen through the pressure maintenance device to close the pilot line actuator. Subsequently, close valve D (Fig. 9) or (#4, Fig. 5) and adjust the air or nitrogen pressure to the appropriate value in Table A as indicated on air pressure gauge (#22, Fig. 5).
9. Check that valves D (Fig. 9) and F (Fig. 9) are closed. Open slightly the valve controlling water supply to the Deluge Valve, closing the main drain valve B (Fig. 9) when water flows. Observe if water leaks through ball drip valve E (Fig. 9), into drain cup J (Fig. 9). If no leak occurs the water seat is tight. Open slowly but fully the valve controlling water supply to the Deluge Valve. Verify that it is fully opened and properly monitored.
10. Valve A (Fig. 9) must remain open when the Deluge Valve has been reset, to maintain water pressure in the push rod chamber.

    Note: The pressure in the push rod chamber may increase beyond the rated pressure of the valve during setup. This pressure should be bled off by either, leaving the model B Manual Emergency Station partially open (i.e. so the pushrod chamber pressure reads approximately 5 psi [0,34 bar] below the supply pressure) during setup or by slightly opening the Model B Manual Emergency Station to bleed off extra pressure, being careful to not open the Model B Manual Emergency Station enough to trip the valve. It is recommended to either close or leave partially open, the main valve controlling water supply while performing the bleeding of pressure from the pushrod chamber to prevent water flow should the valve trip. After bleeding the excess pressure from the pushrod chamber, close the Model B Manual Emergency Station and fully open the main valve controlling water supply. Verify that the main valve controlling water supply is fully opened and properly monitored.

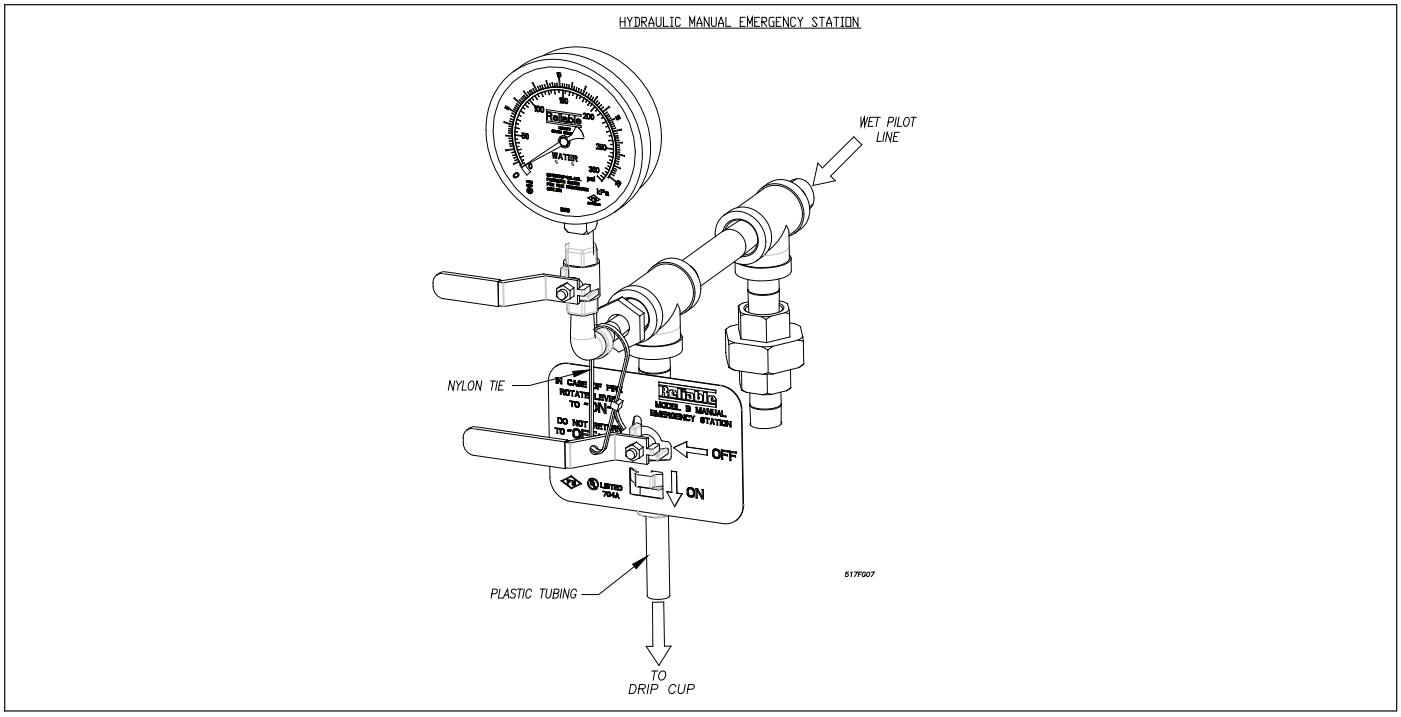

Fig. 7

11. Verify that the Model B Manual Emergency Station, valve D (Fig. 9) is sealed in the OFF position with the appropriate nylon tie.

Inspection and Testing

Refer to Figs. 8 & 9.

1. **Water supply —** be sure the valves controlling water supply to the Deluge Valve are opened fully and properly monitored.
2. **Alarm line —** be sure that valve E (Fig. 9) is opened and remains in this position.
3. **Other trimming valves —** check that valve A (Fig. 9) is open, as well as all of the pressure gauge's ¼" ball valves. Valves D, F, & H (Fig. 9) should be closed.
4. **Ball drip valve E (Fig. 9) —** Push in on the plunger to be sure ball check is off its seat. If no water appears, the Deluge Valve's water seat is tight. Inspect the bleed hole (see Fig. 8) on the underside of the push rod chamber for leakage.
5. **Dry pilot trim —** check air gauge pressure for conformance to Table A.
6. **Releasing device —** check outlet of the releasing device (i.e., the dry pilot line actuator, solenoid valve, or the hydraulic manual emergency station) for leakage. Also verify that tubing drain lines from releasing devices are not pinched or crushed which could prevent proper releasing of the Deluge Valve.
7. **Testing alarms —** Open valve F (Fig. 9) permitting water from the supply to flow to the electric sprinkler alarm switch and to the mechanical sprinkler alarm (water motor). After testing, close this valve securely. Push in on the plunger of ball drip valve E (Fig. 9) until all of the water has drained from the alarm line.
8. **Operation test —** Open the Model B Manual Emergency Station, valve D (Fig. 9). **Note:** An operational test will cause the Deluge Valve to open and flow water into the sprinkler system.
9. Secure the Model B Manual Emergency Station, valve D (Fig. 9), in the OFF position with nylon tie after Deluge Valve is reset.

Testing Detection System Without Operating Deluge Valve

Refer to Figs. 5 & 9.

1. Close the valve controlling water supply to Deluge Valve and open the main drain valve B (Fig. 9).
2. Verify that valve A (Fig. 9) is open, allowing water to enter the push rod chamber.
3. Operate detection system —
   A. Wet Pilot Trim—open Model B Manual Emergency Station, valve D (Fig. 9).
   B. Dry Pilot Trim—directly above the Model LP Dry Pilot Line Actuator, remove the air pressure gauge (#24, Fig. 5) and open the ¼" ball valve (#38, Fig. 5).
   C. Electric Actuation— refer to Bulletin 700.
4. Operation of the detection system must result in a sudden drop of water pressure in the push rod chamber.
5. Reset detection system — reverse operations performed in step three above and then proceed according to the directions listed in the "Resetting Model DDX-SS Deluge Valve Systems" section of this bulletin for resetting the Deluge Valve.

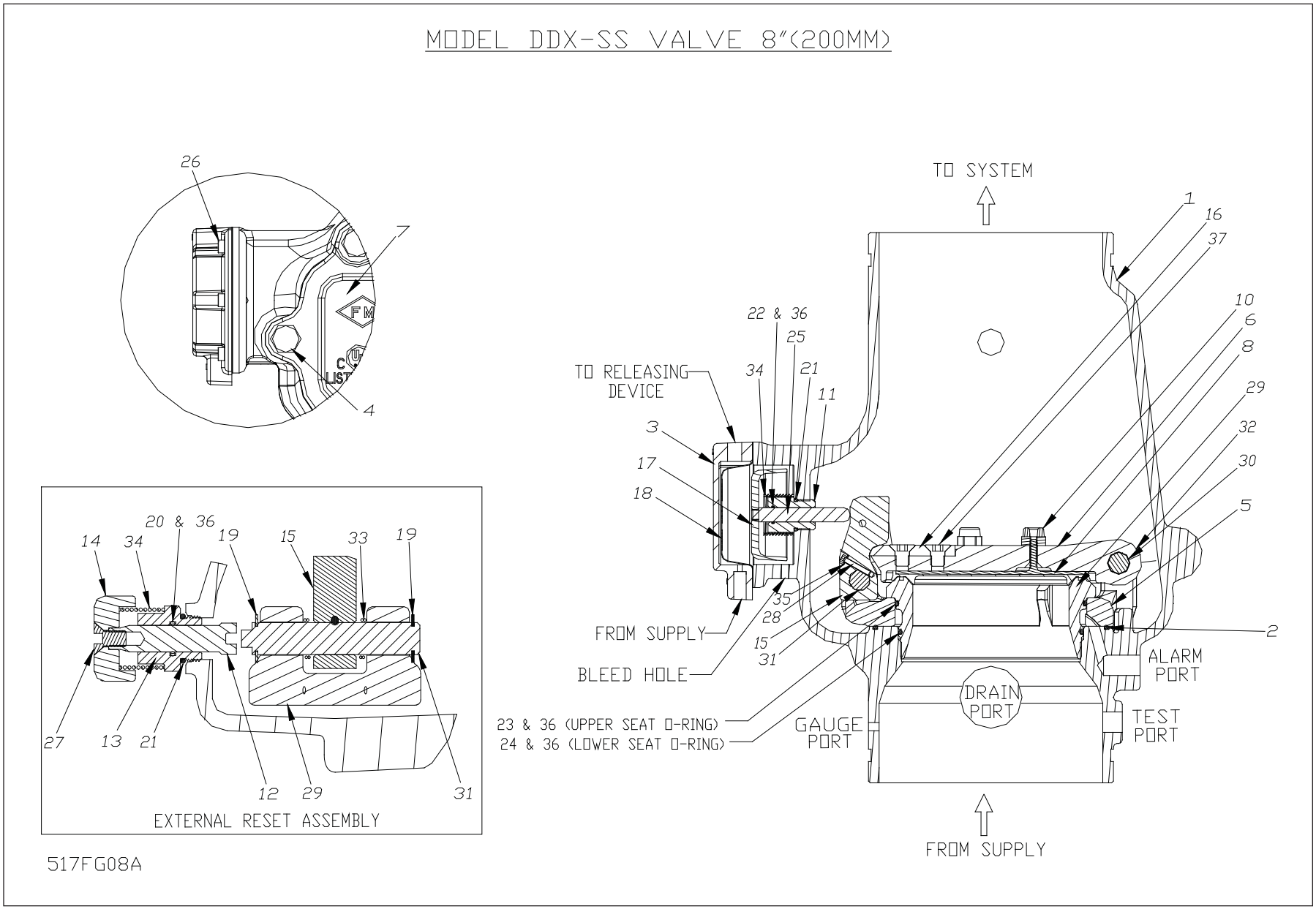
MODEL DDX-SS VALVE 8"(200MM)
26
7
FM
C
U
LIST
4
TO SYSTEM
1
16
37
10
6
8
29
32
30
5
2
22 & 36
25
34
21
11
TO RELEASING DEVICE
3
17
18
35
28
15
31
FROM SUPPLY
BLEED HOLE
23 & 36 (UPPER SEAT O-RING)
24 & 36 (LOWER SEAT O-RING)
GAUGE PORT
DRAIN PORT
ALARM PORT
TEST PORT
FROM SUPPLY
14
34
20 & 36
19
15
33
19
27
13
21
12
29
31
EXTERNAL RESET ASSEMBLY
517FG08A

Fig. 8

Model DDX-SS 8" (200mm) Deluge Valves Parts List (Refer to Fig. 8)

Item No.	Part Number	Part Description	No. Req'd
1	91026029	Body	1
2	95406414	O-Ring, (266)	1
3	92126358	Cover, Pushrod	1
4	95606137	Screw, Hex Cap, 5/8"-11 x 2", Stainless Steel (See Note)	8
5	91326018	Mounting Ring	1
6	91926008	Clapper	1
7	92126069	Cover, Access	1
8	93416008	Seal Assembly	1
9	93706008	Gasket, Access Cover (Not Shown)	1
10	93722000	Bumpstop Assembly	3
11	93916006	Pushrod Guide	1
12	93916008	Shaft, Reset	1
13	94106068	Housing, Reset	1
14	94356010	Knob, Reset	1
15	94506008	Lever	1
16	95006411	Striker, Lever/Clapper	1
17	95106006	Piston	1
18	95276006	Diaphragm	1
19	95316408	Clip, Retaining, ¾" Shaft, SS	4
20	95406007	O-Ring, (114)	1
21	95406024	O-Ring, (912)	2
22	95406407	O-Ring, (014)	1
23	95406413	O-Ring, (260)	1
24	95406412	O-Ring, (259)	1
25	95506006	Pushrod	1
26	95606136	Screw, Socket Head, ¼"-20 x 5/8" (see note)	6
27	95606138	Screw, Socket Cap, Flat Head, 3/8"-16 x ¾"	1
28	95606130	Screw, Socket Head, #10-32 x 1", SS	1
29	96026008	Seat	1
30	96206008	Pin, Hinge	1
31	96216008	Pin, Lever	1
32	96310008	Spacer, Clapper	2
33	96406008	Spring, Lever	1
34	96406906	Spring, DDX	2
35	96906111	Washer, Spring Lock, #10, SS	1
36	85000050	O-ring Grease, DuPont™ Krytox® GPL-201	A/R
37	95606135	Screw, Socket Cap, Flat Head, ½"-13 x ¾", SS	2
38	94616921	Label, Caution, Knob (Not Shown)	1
39	91556922	Ball Chain, 1/8" (Not Shown) (Length in Inches)	6
40	91556923	Clamping Link, Ball Chain, (Not Shown)	1

Note: If Items #4 and #26 are removed, their threads should be coated in anti-seize lubricant prior to reassembly

Draining Excess/Condensate Water From System

Refer to Fig. 9

1. Close the valve controlling water supply to Deluge Valve. Also close valve A and open main drain valve B.
2. Open condensate drain valve H until all water has drained. Close valve H.
3. Close main drain valve B. If system contains pressurized air, allow air pressure to come back up to specification. Open valve A and the valve controlling the water supply to the Deluge Valve.

Maintenance Procedures - Model DDX-SS Deluge Valve

Refer to Figs. 5, 8, & 9.

1. **Mechanical sprinkler alarm (water motor–not shown) not operating:** This is most likely caused by a clogged screen in the strainer of the water motor. Proceed as follows: Remove plug from the strainer. Remove and clean the screen. Replace the screen and the plug, and then tighten securely (Ref. Bulletin 613).
2. **Leakage out of the ball drip valve E (Fig. 9).**
   a. **Water leakage due to water column in deluge systems:**
   This condition can be caused by leakage past the system side of the Model DDX-SS Deluge Valve's seal assembly (#8, Fig. 8). Be sure that this surface is free of any type of debris. To eliminate leakage due to water column in a deluge system, refer to the section in this bulletin marked "Draining Excess/Condensate Water From System". If the problem continues proceed to the following section.
   b. **Leakage, air or water from the ball drip valve, E (Fig. 9):**
   If system air is leaking out the ball drip valve, the problem is either damage to the air side of the Model DDX-SS Deluge Valve's seal assembly (#8, Fig. 8), seat (#29, Fig. 8), mounting ring O-ring (#2, Fig. 8) or the upper seat O-ring (#23, Fig. 8). If supply water is leaking out the ball drip valve, the problem could be caused by damage to the Model DDX-SS Deluge Valve's seal assembly (#8, Fig. 8), seat (#29, Fig. 8), or lower seat O-ring (#24, Fig. 8). The following section provides instructions to correct both conditions:
      A. Shut down the valve controlling the water supply to the Deluge Valve and open the 2" main drain valve B (Fig. 9). Open the water column drain valve H (Fig. 9). Close the pushrod chamber supply valve A (Fig. 9) and open the Model B Manual Emergency Station, valve D (Fig. 9).
      B. Remove the Deluge Valve's front (handhold) cover (#7, Fig. 8) and inspect the seat (#29, Fig. 8), clapper (#6, Fig. 8), and seal assembly (#8, Fig. 8) for damage. If inspection indicates damage to the seal assembly (#8, Fig. 8), replace as follows:

Remove the bumpstop nuts (#10, Fig.8) and remove the seal assembly (#8, Fig.8). Install a new seal assembly (#8, Fig.8) and thread the bumpstop nuts (#10, Fig.8) onto the threaded studs of the seal assembly (#8, Fig.8) and tighten finger tight plus ¼ to ½ turn. If inspection indicates damage to the clapper (#6, Fig. 8) only, then the clapper subassembly can be removed as follows:

At the rear of the valve, disconnect the water column drain trim section by removing the ¾"x¼" reducing bushing (#17, Fig.5) with associated trim. Remove the retaining ring (condensate drain side) from the clapper hinge pin (#30, Fig. 8) and push this pin through the hand hole opening and remove the clapper subassembly. Replace the seal assembly as described previously. Inspect the clapper (#6, Fig. 8) visually before reinstalling. Reinstall in the reverse order making sure the clapper spacers are in their proper position. If the seat (#29, Fig. 8) is damaged or it is suspected that the leakage is through the lower O-ring (#24, Fig. 8), the seat clapper subassembly is easily removed as a unit as follows:

Using Reliable P/N 6881608000 Seat Wrench, remove the seat by unscrewing. This will loosen the seat-clapper-mounting ring subassembly. Reach into the valve and grasp the seat and remove it from the valve. Then remove the clapper-mounting ring subassembly from the valve. Visually examine all components of the seat clapper-mounting ring subassembly replacing any component that appears damaged. New O rings (#2, #23 & #24, Fig. 8) should always be used for reassembly.

Reassembly:

Clean the bore of the valve body. Lubricate the bore with O-ring grease. Lubricate and install the O-rings (#23 & #24, Fig. 8) onto the seat and mounting ring O-ring (#2, Fig. 8) into the body (#1, Fig. 8). Insert the clapper-mounting ring subassembly into the handhold opening of the Deluge Valve. Align the mounting ring so that the Lever (#15, Fig. 8) is near the pushrod (#25, Fig. 8) and the mounting ring (#5, Fig. 8) "ears" are between the tabs of the valve body (#1, Fig. 8). Insert the seat (#29, Fig. 8) into the valve body (#1, Fig.8) and through the clapper-mounting ring subassembly. Start to thread the seat (#29, Fig. 8) into the body by hand, then tighten the seat (#29, Fig. 8) with seat wrench 6881608000 until it bottoms out on the mounting ring (#5, Fig. 8).Verify that the seat-clapper-mounting ring subassembly is in the fully down position between the tabs of the body, and check to see that the lever (#15, Fig. 8) lines up with the push rod (#25, Fig.8). Loosen and reassemble if necessary. Reassemble the handhold cover (#7, Fig. 8) and set up the Model DDX-SS Deluge Valve as per the section "Resetting Model DDX-SS Deluge Valve Systems."

3. Leakage out of the push rod chamber vent hole:

A small bleed hole is located on the underside of the push rod chamber (see Fig. 8). If there is air or water leakage coming out of this hole, do the following:

a. Shut down the valve controlling water supply to the Deluge Valve. Relieve the inlet pressure by opening the 2" drain valve B (Fig. 9). Close the valve A (Fig. 9) that supplies water to the push rod chamber, and open the Model B Manual Emergency Station, valve D (Fig. 9).
b. Remove the trim at the unions nearest to the push rod chamber cover (#3, Fig. 8).
c. Take the push rod chamber cover (#3, Fig. 8) off by removing the six retaining screws (#26, Fig. 8).

CONDITION ONE (Water coming out of the bleed hole):

Water coming out of the bleed hole is caused by a leaking diaphragm (#18, Fig. 8). Visually inspect the push rod chamber cover (#3, Fig. 8) and piston (#17, Fig. 8) to determine what could have damaged the diaphragm and correct. Install a new diaphragm. **NOTE:** The diaphragm has two different surfaces; it is not bi-directional. It will fail if installed backwards! Roll the diaphragm so that the smooth surface (the pressure side) conforms to the inside of the push rod chamber cover and reassemble the six retaining screws (#26, Fig. 8) with an installation torque of 15 foot-pounds. Set up the Model DDX-SS Deluge Valve as per the section "Resetting Model DDX-SS Deluge Valve Systems."

CONDITION TWO (System Air coming out of the bleed hole):

System air coming out of the bleed hole is caused by a defective O-ring assembled to the push rod guide (#11, Fig. 8). Remove the piston-push rod subassembly, push rod spring (#34, Fig. 8), and push rod guide (#11, Fig. 8). Verify by hand turning, that the push rod cannot be unscrewed from the piston. Replace all O-rings and the push rod guide (#21 & #22, Fig. 8). The correct installation torque for the pushrod guide is 35 inch-pounds. **CAUTION:** Do not over tighten the push rod guide. Reassemble the components that were initially removed. Reinstall the diaphragm (#18, Fig. 8) if it appears to be in good shape, otherwise, replace it also. **NOTE:** The diaphragm has two different surfaces; it is not bi-directional. It will fail if installed backwards! Roll the diaphragm so that the smooth surface (the pressure side) conforms to the inside of the push rod chamber cover and reassemble the six retaining screws (#26, Fig. 8) with an installation torque of 15 foot-pounds. Set up the Model DDX-SS Deluge Valve as per the section "Resetting Model DDX-SS Deluge Valve Systems."

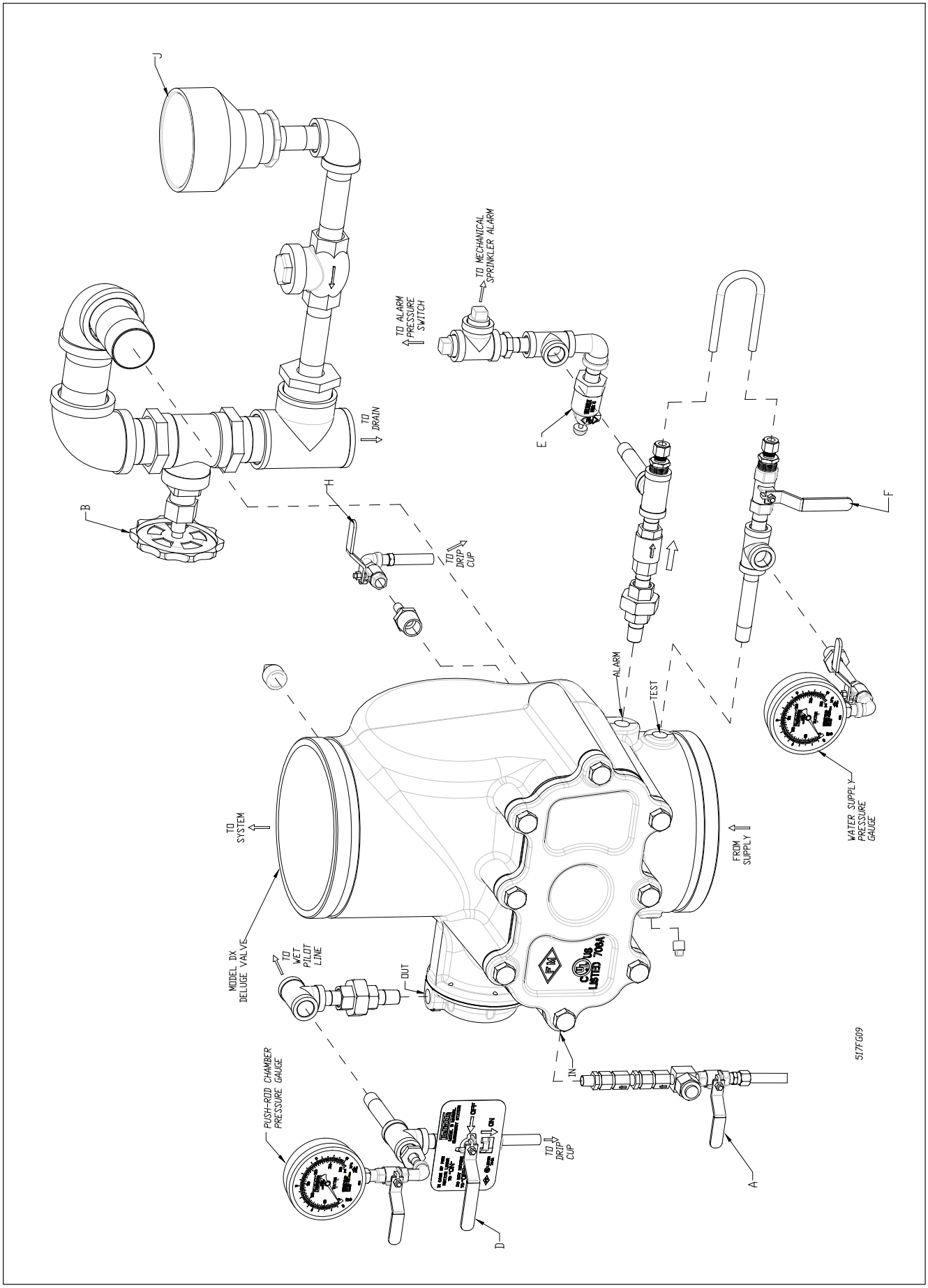
J
B
TO DRAIN
TO ALARM PRESSURE SWITCH
TO MECHANICAL SPRINKLER ALARM
E
H
TO DRIP CUP
F
ALARM
TEST
TO SYSTEM
MODEL DX DELUGE VALVE
TO WET PILOT LINE
OUT
IN
FROM SUPPLY
WATER SUPPLY PRESSURE GAUGE
PUSH-ROD CHAMBER PRESSURE GAUGE
TO DRIP CUP
D
A
517FG09

Fig. 9

Ordering Information:

Specify:

- **Valve Model & Size —** 8" (200 mm) Model DDX-SS Deluge Valve (P/N 6103080002)
- **Trim —** Wet Pilot Trim, Dry Pilot Trim, or Electric Actuation Trim. Each trim set is available in individual parts, in time-saving, segmentally assembled kit forms, or fully assembled to the Model DDX-SS Deluge Valve with or without a control valve). The Electric Actuation trim is available with a 175 psi (12,1 bar) or 250 psi (17,2 bar) rated solenoid valve.
- **Low Air Pressure Switch (Dry Pilot Line Only) —** UL/FM Approved (System Sensor Model EPS40-2) or ULC Listed (System Sensor Model EPSA40-2).

Wet Pilot Line Deluge

Trim Configurations	Trim Part Numbers
Fully Assembled to G/G DDX-SS Valve w/o Control Valve	6505080201
Fully assembled to F/F DDX-SS Class 150 Valve w/o Control Valve	6505081202
Fully Assembled to F/F DDX-SS Class 300 Valve w/o Control Valve	6505081203
Segmentally Assembled (DDX-SS Valve Sold Separately)	6503001025
Individual Parts (DDX-SS Valve Sold Separately)	6503001024

Dry Pilot Line Deluge

	Trim Configurations	Trim Part Numbers
UL/FM Approved Pressure Switch	Fully Assembled to G/G DDX-SS Valve w/o Control Valve	6505081206
	Fully assembled to F/F DDX-SS Class 150 Valve w/o Control Valve	6505081207
	Fully Assembled to F/F DDX-SS Class 300 Valve w/o Control Valve	6505081208
	Segmentally Assembled (DDX-SS Valve Sold Separately)	6503001132
	Individual Parts (DDX-SS Valve Sold Separately)	6503001131
ULC Approved Pressure Switch	Fully Assembled to G/G DDX-SS Valve w/o Control Valve	6505081209
	Fully assembled to F/F DDX-SS Class 150 Valve w/o Control Valve	6505081210
	Fully Assembled to F/F DDX-SS Class 300 Valve w/o Control Valve	6505081211
	Segmentally Assembled (DDX-SS Valve Sold Separately)	6503001134
	Individual Parts (DDX-SS Valve Sold Separately)	6503001133

Electric Actuation Deluge (Explosion Proof Solenoid Available Upon Request)

Trim Configurations	Trim Part Numbers
Fully Assembled to G/G DDX-SS Valve w/o Control Valve	6505081212
Fully assembled to F/F DDX-SS Class 150 Valve w/o Control Valve	6505081213
Fully Assembled to F/F DDX-SS Class 300 Valve w/o Control Valve	6505081214
Segmentally Assembled (DDX-SS Valve Sold Separately)	6503001530
Individual Parts (DDX-SS Valve Sold Separately)	6503001529

Note: For metric installations, a 2" NPT x R2. ISO 7/1 x Close Nipple (Reliable P/N 98543401) is sold separately as an adapter for the single drain outlet of the trims.

- **Additional equipment —** Air compressors, electric detection, actuation equipment, and mechanical sprinkler alarms must be ordered separately. These devices are described in Bulletin 700.

Installation Dimensions in Inches (mm)

A	B	C	D*	E	F	G	H	J	K	L	M	N	P	Q	R
10½ (267)	9¼ (235)	11½ (292)	19⅜ (492)	31¾ (807)	25¾ (654)	33 (838)	9 (229)	15½ (419)	7 (178)	8½ (216)	17 (432)	8 (203)	10 (254)	12¼ (311)	15 (381)

* Flange/flange versions are 21¼” (540 mm)

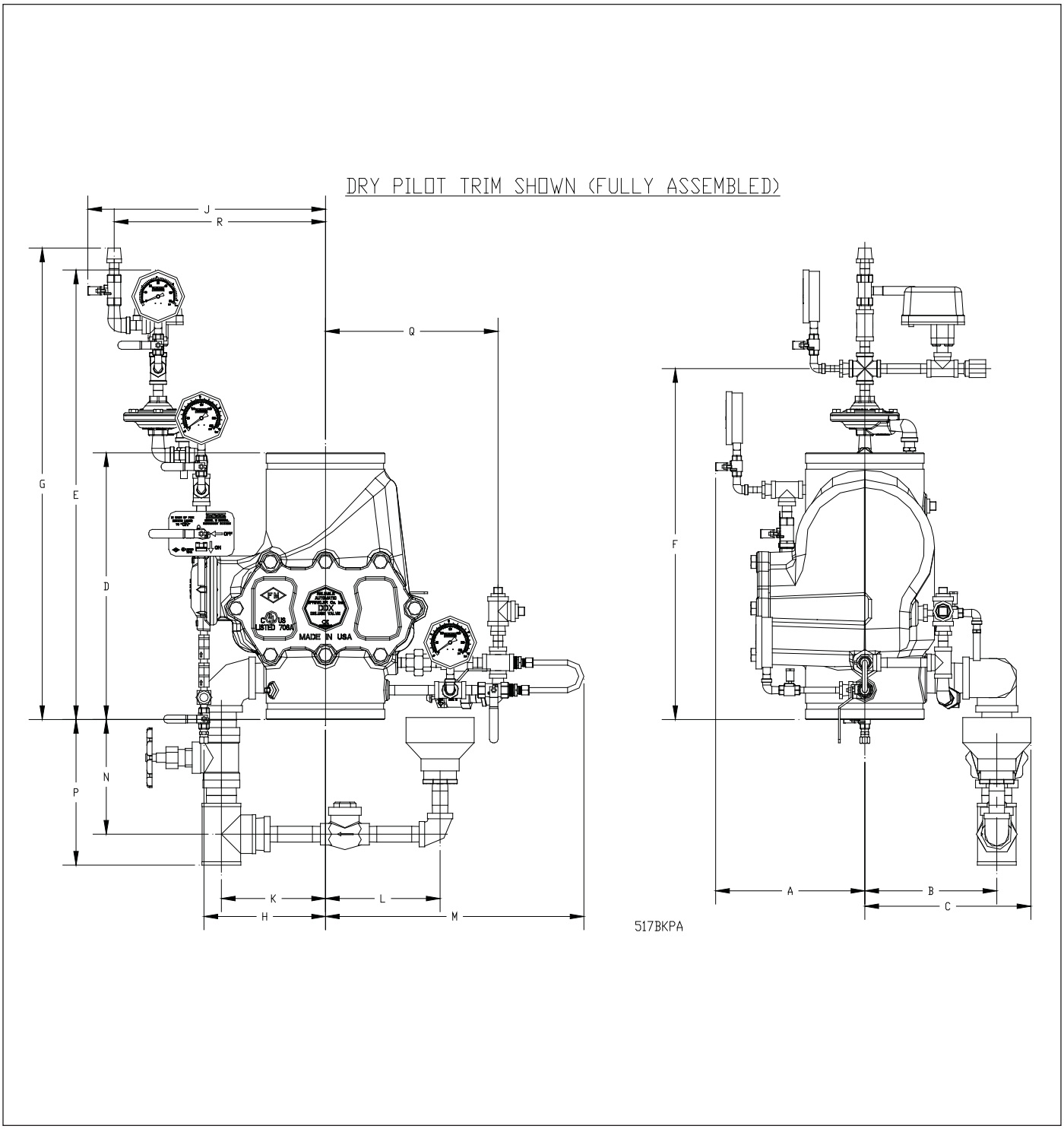

SOLENOID VALVE INSPECTIONS, TESTS AND MAINTENANCE

WARNING: THE OWNER IS RESPONSIBLE FOR MAINTAINING THE FIRE PROTECTION SYSTEM IN PROPER OPERATING CONDITION. ANY SYSTEM MAINTENANCE OR TESTING THAT INVOLVES PLACING A CONTROL VALVE OR DETECTION SYSTEM OUT OF SERVICE MAY ELIMINATE THE FIRE PROTECTION OF THAT SYSTEM. PRIOR TO PROCEEDING, NOTIFY ALL AUTHORITIES HAVING JURISDICTION. CONSIDERATION SHOULD BE GIVEN TO EMPLOYMENT OF A FIRE PATROL IN THE AFFECTED AREA.

WARNING: PRIOR TO OPERATING THE SOLENOID VALVE, BE SURE TO CLOSE THE SYSTEM CONTROL VALVE TO AVOID UNINTENTIONAL OPERATION OF THE DELUGE VALVE

1. Inspections: It is imperative that the system be inspected and tested in accordance with NFPA 25 on a regular basis. The frequency of the inspections may vary due to contaminated water supplies, corrosive water supplies, or corrosive atmospheres. In addition, the alarm devices, detection systems, or other connected trim may require a more frequent schedule. Refer to the system description and applicable codes for minimum requirements.
2. The valve must be inspected at least monthly for cracks, corrosion, leakage, etc., and cleaned, repaired, or replaced, or replaced as necessary.
3. If leakage is suspected through the solenoid valve, the valve diaphragms and seats should be inspected and if necessary, repaired or replaced.

WARNING: CLOSE SYSTEM CONTROL VALVE, TURN OFF POWER SUPPLY, AND DEPRESSURIZE VALVE BEFORE DISASSEMBLING VALVE. IT IS NOT NECESSARY TO REMOVE THE VALVE FROM THE PIPE LINE TO MAKE INSPECTIONS.

4. When lubricating valve components, use high grade silicone grease (Dow Corning® 111 Compound Lubricant or equal).
5. When reassembling, tighten parts to torque values indicated in the manufacturer's maintenance instructions (packed with valve).
6. After maintenance is completed, operate the valve a few times to be sure of proper operation. A metallic "click" signifies the solenoid is operating.
7. All service must be performed by qualified personnel. Upon completion of inspections or replacement of the valve, the entire system must be checked for proper operation. See appropriate system description and testing instructions for additional information.

The equipment presented in this bulletin is to be installed in accordance with the latest published Standards of the National Fire Protection Association, Factory Mutual Research Corporation, or other similar organizations and also with the provisions of governmental codes or ordinances whenever applicable. Productsmanufactured and distributed by Reliable have been protecting life and property for over 90 years, and are installed and serviced by the most highly qualified and reputable sprinkler contractors located throughout the United States, Canada and foreign countries.

Manufactured by

Reliable®

The Reliable Automatic Sprinkler Co., Inc.
(800) 431-1588 Sales Offices
(800) 848-6051 Sales Fax
(914) 829-2042 Corporate Offices
www.reliablesprinkler.com Internet Address

Recycled Paper

Revision lines indicate updated or new data.

EG. Printed in U.S.A 12/10 P/N 9999970376